ASPIRE™
THE CONCRETE BRIDGE MAGAZINE
WINTER 2008
www.aspirebridge.org

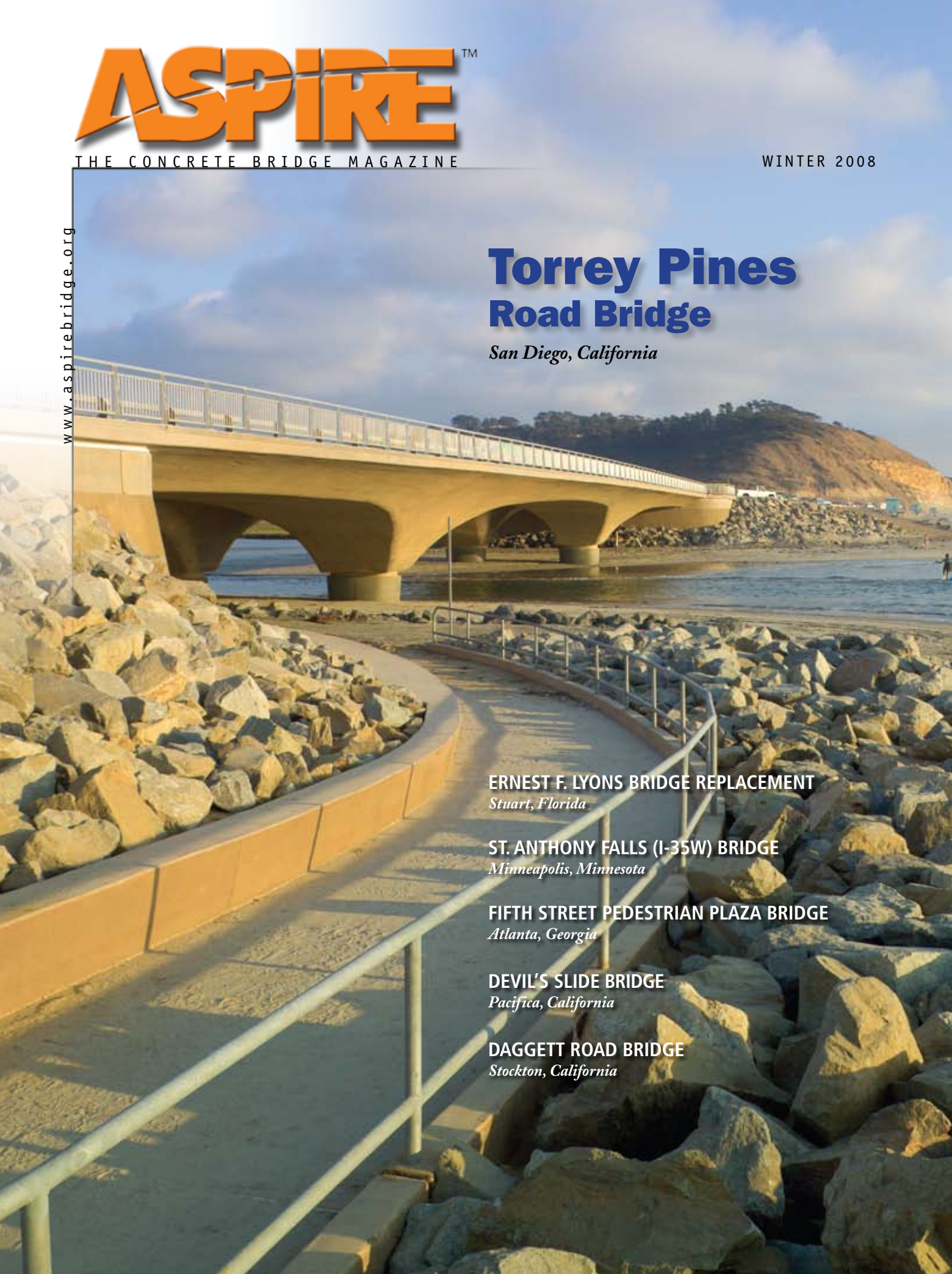

Torrey Pines Road Bridge

San Diego, California

ERNEST F. LYONS BRIDGE REPLACEMENT
Stuart, Florida

ST. ANTHONY FALLS (I-35W) BRIDGE
Minneapolis, Minnesota

FIFTH STREET PEDESTRIAN PLAZA BRIDGE
Atlanta, Georgia

DEVIL'S SLIDE BRIDGE
Pacifica, California

DAGGETT ROAD BRIDGE
Stockton, California

LEAP Bridge. It's all in there.

The power of LEAP Software's mature and proven analysis & design applications is now ONE.

ONE Central Application

LEAP Bridge acts as the central information hub for your projects. Exchange data with AASHTOWare's BRIDGEWare Database. Transfer important data with any LandXML compliant applications (MicroStation®, GEOPAK®, InRoads® and more).

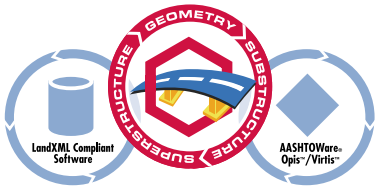

ONE Parametric Design System

All data for bridge components is exchanged and maintained in a single database with design changes from individual modules populated instantaneously. Your bridge is always up to date.

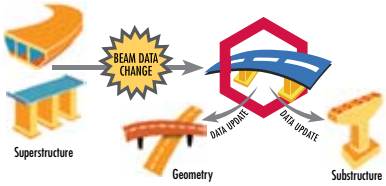

ONE Console

All component design modules are accessed from the single user console. 3D solid or transparent views of your entire bridge project or individual components are available on demand with the capability to print or export views to DXF files. Run full project/bridge reports and individual component reports from a single location.

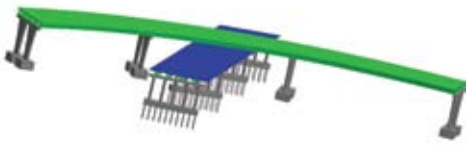

ONE Powerful Solution

Efficient, logical and accurate. LEAP Software engineers software for engineering minds. The new fully integrated LEAP Bridge is developed by engineers who have expert knowledge of code specifications, design methodologies and have been leading the industry in new technology development for over twenty-two years. When you work in LEAP Bridge you have the advantage of a virtual bridge engineering brain trust at your fingertips powering a seamless analysis and design workflow.

LEAP® SOFTWARE

NEW configurations and licenses available to match the way you work!

Please contact us for more information. **(888) 793-5490 • sales@leapsoft.com • www.leapsoft.com**

CONTENTS

Features

Departments

Photo: Vince Streano; streano-havens.com.

Photo: ©FIGG.

Photo: Sunbelt Structures Inc.

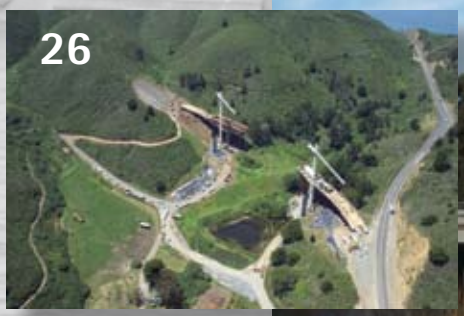

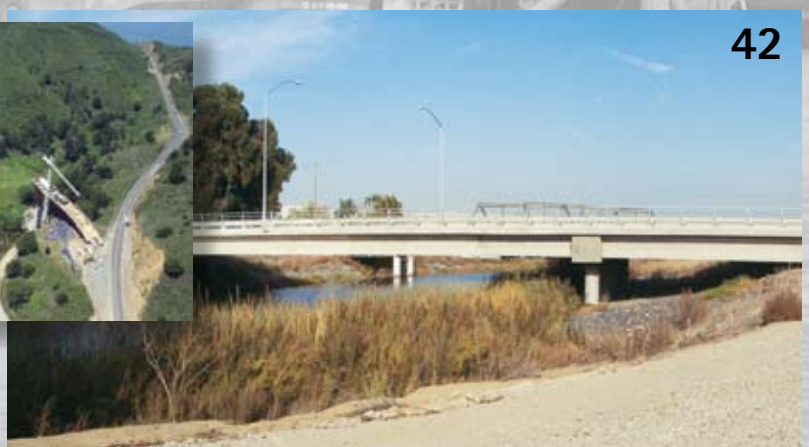

San Francisco-Oakland Bay Bridge
Photo: Caltrans.

EDITORIAL

Photo: Ted Lacey Photography.

Sustainability: Is it really for bridge engineers?

John S. Dick, *Executive Editor*

With this issue, *ASPIRE*™ launches a year-long exploration of sustainable design as it applies to highway bridges. These presentations will highlight the unique ways in which modern concrete bridges can contribute to a better legacy for our children and generations to come.

To start off, the feature article on page 16 presents a perspective by Dr. Tess Alhborn of Michigan Technological University. Its intent is to define sustainability issues that relate to the transportation infrastructure.

The three subsequent issues this year will look deeper into how we balance the impacts of our choices on society, economics, and ecology (or people, profit, and planet). Each will feature a guest author, who will address specific sustainable concepts applicable to concrete bridges. These articles will help provide a better understanding of our role in creating sustainable designs.

ASPIRE celebrates First Birthday

We chart another accomplishment with this issue: *ASPIRE* begins its second year of publication. The magazine now contains more pages and a wider array of features. For example, in light of recent bridge accidents, we begin a series titled, "Safety and Serviceability," which will feature a different guest author each issue. The series will discuss such topics as the National Bridge Inventory (see the article by Stan Woods, Wisconsin Bridge Engineer, retired, on page 47). Other topics under consideration include maintenance, redundancy, repair, and the like. If there is a topic you'd like to see addressed, please let us know.

Another new feature, "Concrete Connections," (page 46) collects Web addresses that offer useful research reports, studies, and other resources.

Your opinion is important! Please, communicate your ideas to us!

We invite you to share your impressions about *ASPIRE* magazine with the editors and staff. A simple survey is available by selecting the "Survey" button at *www.aspirebridge.org*. It offers multiple-choice and fill-in-the-blank questions. It'll take less than 5 minutes to complete.

Why participate? This is your magazine, by and about bridge practitioners. To be valuable to you, it must be relevant to you. Your opinion is crucial to keeping the magazine on target for your needs.

To keep *ASPIRE* coming, please return the postage-free post card. This will help us qualify for the optimal postage rate and ensure you continue to receive the magazine at no cost.

Free subscription; low postage; surely, a win-win solution.

Log on NOW at ***www.aspirebridge.org*** and take the *ASPIRE* Reader Survey.

PCI Precast/Prestressed Concrete Institute
ASBI American Segmental Bridge Institute
PCA Portland Cement Association
pti Post-Tensioning Institute
40 YEARS ACAA American Coal Ash Association
ESCSI Expanded Shale Clay and Slate Institute
NRMCA National Ready Mixed Concrete Association
SFA Silica Fume Association
wri Wire Reinforcement Institute

Executive Editor: John S. Dick

Managing Technical Editor: Dr. Henry G. Russell

Managing Editor: Craig A. Shutt

Editorial Staff: Daniel C. Brown, Roy Diez, Wayne A. Endicott, Donald P. Merwin, Anne Patterson

Editorial Administration: James O. Ahtes Inc.

Art Director: Mark Leader, Leader Graphic Design Inc.

Layout Design: Marcia Bending, Leader Graphic Design Inc.

Electronic Production: Chris Bakker, Jim Henson, Leader Graphic Design Inc.

Ad Sales: Jim Oestmann
Phone: (847) 577-8980 • Cell: (847) 924-5497
Fax: (847) 577-0129
joestmann@arlpub.com

Reprint Sales: Mark Leader
(847) 564-5409
e-mail: sales@leadergraphics.com

Publisher:
Precast/Prestressed Concrete Institute,
James G. Toscas, President

POSTMASTER: Send address changes to *ASPIRE*, 209 W. Jackson Blvd., Suite 500, Chicago, IL 60606-9887. Standard postage paid at Chicago, IL, and additional mailing offices.

ASPIRE (Vol. 2, No. 1), ISSN 1935-2093 is published quarterly by the Precast/Prestressed Concrete Institute, 209 W. Jackson Blvd., Suite 500, Chicago, IL 60606-6938.

If you have a project to be considered for *ASPIRE*, send information to *ASPIRE*,
209 W. Jackson Blvd., Suite 500,
Chicago, IL 60606-9887
phone: (312) 786-0300
www.aspirebridge.org
e-mail: info@aspirebridge.org

Cover: North Torrey Pines Road Bridge
San Diego, California
Photo: Vince Streano: streano-havens.com

As the designer for the Flatiron-Manson Joint Venture, the FIGG Team is creating a new landmark bridge for Minnesota. The St. Anthony Falls Bridge is a modern concrete bridge for the future featuring a 504′ main span over the Mississippi River. During a FIGG Bridge Design Charette,™ on October 24, 2007 the community selected curved white concrete piers, an open barrier rail, feature lighting and local stone abutment walls. The new bridge is ten lanes wide, has smart bridge technology and future options for mass transit. It is being designed and built in 15 months using local labor and materials.

35W

ST. ANTHONY FALLS BRIDGE

Theme: Arches • Water • Reflection

FOR THE MINNESOTA DEPARTMENT OF TRANSPORTATION

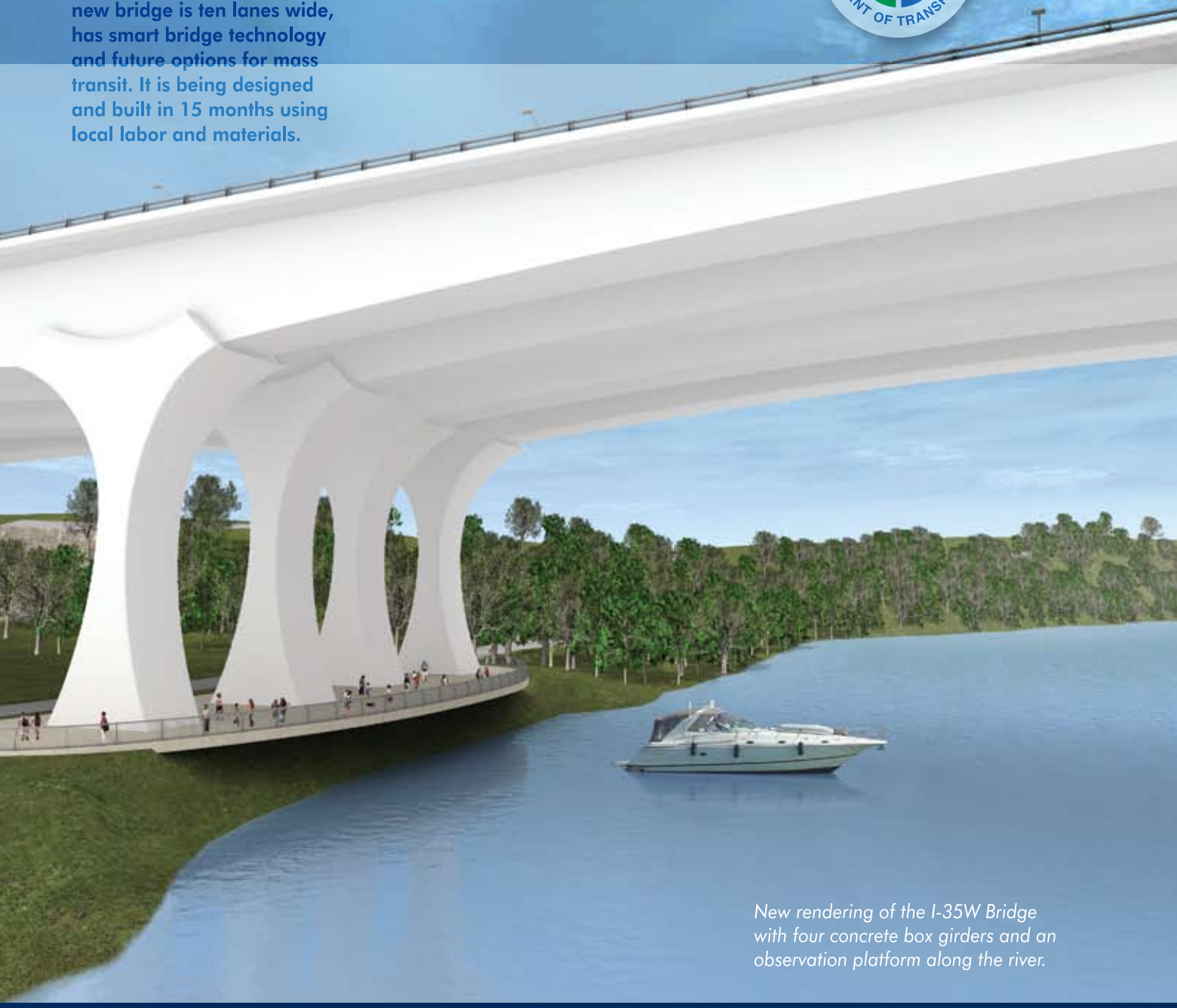

New rendering of the I-35W Bridge with four concrete box girders and an observation platform along the river.

Join the team...

that designs world-class bridges, resulting in 272 awards for innovation, aesthetics and efficiency. FIGG is currently seeking extraordinary bridge design engineers, CADD designers, construction site engineers and inspectors. If you are interested in a remarkable bridge career, please contact us at www.figgbridge.com or 1.800.358.FIGG (3444).

An equal opportunity employer

FIGG

1.800.358.3444
www.figgbridge.com

READER RESPONSE

From my experience, ASPIRE™ has been carefully crafted to be an avenue for the entire concrete bridge industry. It brings a unified voice to speak for tconcrete bridges and is well presented. It covers the design and construction arena well. An area where it could expand into would be inspection techniques and materials. It was a pleasure working with the publishing staff when PB was featured in the last issue of ASPIRE.

Vijay Chandra
Sr. Vice President, PB

Congratulations on ASPIRE magazine's first year of publication. It has been an exciting year and the articles published reflect this. Each magazine has been outstanding and I very much look forward to the coming year's publications. Once again, congratulations on Aspire magazine's first year of publication and keep up the good work!

Paul V. Liles, Jr., P.E.
State Bridge Engineer, Georgia DOT
Atlanta, Ga.

I wish to take this opportunity to express my appreciation for the newly launched ASPIRE magazine. I have found the articles informative, offering new ideas to implement both in design and aesthetic application. Keep up the good work.

Edward P. Wasserman
CE Director, TN DOT, Structures Division
Nashville, Tenn.

From my perspective, it is wonderful to have a periodical devoted exclusively to the bridge topic. Most of us bridge engineers scour the engineering periodicals for bridge and related structural topics. It is a great boon to have a periodical such as ASPIRE solely devoted to concrete bridges—especially if the periodical can provide state-of-the-art information or information that can provide current trends, and innovations in technology. The articles are well written—just enough mix of the technical details to keep the reader interested and not so long as to bore the reader to death. The variety of articles is balanced with some continuity from issue to issue such as the highlighted state DOT. The quality of illustrations is a plus. Not pushing special interests is also a positive. Keep up the good work.

Julius F. J. Volgyi, Jr., P.E.
Assistant State Structure and Bridge Engineer
Virginia Department of Transportation, Structure and Bridge Division
Richmond, Va.

It has been very enjoyable to read ASPIRE since most articles are related to innovative design and construction of concrete bridges. Particularly, the case studies with project background are really helpful. Hopefully, this magazine can be eventually published monthly. Thank you for your contributions to make ASPIRE happen!

Chuanbing Sun, P.E.
Janssen & Spaans Engineering
Indianapolis, Ind.

DEAL: SOLUTIONS MAKING THE DIFFERENCE

1

2

3

4

During twenty years of worldwide experience, DEAL has assisted contractors and designers by developing the most innovative solutions for efficient bridge construction. DEAL's services include development of conceptual construction equipment, manufacture and operation of construction equipment, and fabrication, installation and operation of forming and erection systems all supported by hands-on, experienced technical assistance.

1. OAKLAND BAY BRIDGE, CALIFORNIA
2. VICTORY BRIDGE, NEW JERSEY
3. HATHAWAY BRIDGE, FLORIDA
4. GALVESTON CAUSEWAY BRIDGE, TEXAS

DEAL

INNOVATIVE
TECHNOLOGY
FOR BRIDGE
CONSTRUCTION

Deal Headquarters
Pozzuolo del Friuli (Udine) Italy
+39 0432 60 79 00
deal@deal.it

www.deal.it

GRUPPO DE ECCHER

CONTRIBUTING AUTHORS

M. Myint Lwin is Director of the FHWA Office of Bridge Technology in Washington, D.C. He is responsible for the National Highway Bridge Program direction, policy, and guidance, including bridge technology development, deployment and education, and the National Bridge Inventory and Inspection Standards.

Dr. Dennis R. Mertz is Professor of Civil Engineering at the University of Delaware. Formerly with Modjeski and Masters, Inc. when the *LRFD Specifications* were first written, he has continued to be actively involved in their development.

Dr. Tess Ahlborn is an Associate Professor at Michigan Technological University, Director of the Center for Structural Durability and a member of the University Transportation Center: Materials in Sustainable Transportation Infrastructure. Her research and teaching focuses on reinforced and prestressed concrete bridge design.

Frederick Gottemoeller is an engineer and architect, who specializes in the aesthetic aspects of bridges and highways. He is the author of *Bridgescape*, a reference book on aesthetics and was Deputy Administrator of the Maryland State Highway Administration.

Stanley W. Woods worked for the Wisconsin Department of Transportation for 42 years and was the State Bridge Engineer before his retirement.

MANAGING TECHNICAL EDITOR

Photo: Ted Lacey Photography

Dr. Henry G. Russell is an engineering consultant, who has been involved with the applications of concrete in bridges for over 35 years and has published many papers on the applications of high performance concrete.

CONCRETE CALENDAR 2008

For links to websites, email addresses, and telephone numbers for these events, go to www.aspirebridge.org.

February 6-8
PCI Quality Control & Assurance Personnel Training & Certification Schools
Level I & Level II
MCPX - Colorado Convention Center, Denver, Colo.

March 20-21
FHWA Accelerated Bridge Construction Conference – Highway for Life
Hyatt Regency Baltimore on the Inner Harbor, Baltimore, Md.

April 14-15
ASBI Grouting Certification Training
J.J. Pickle Research Center, University of Texas at Austin, Austin, Texas

April 24-27
PCI Annual Committee Days
Includes meeting of PCI Bridge Committee and AASHTO Technical Committee on Concrete Design (T-10)
Westin Hotel. Chicago, Ill.

May 4-6
PTI Technical Conference & Exhibition
Hyatt Regency St. Louis, St. Louis, Mo.

May 4-7
NCBC-FHWA 2008 Concrete Bridge Conference
Hyatt Regency St. Louis, St. Louis, Mo.

May 5-10
PCI Quality Control & Assurance Personnel Training & Certification Schools
Embassy Suites Hotel - Nashville Airport, Nashville, Tenn.

June 2-4
International Bridge Conference & Exhibition
Pittsburgh Convention Center, Pittsburgh, Penn.

July 27-30
Sixth National Seismic Conference on Bridges & Highways
Organized by the Federal Highway Administration (FHWA), the Transportation Research Board (TRB), the South Carolina Department of Transportation (SCDOT) and MCEER, University at Buffalo, N.Y.
Francis Marion Hotel, Charleston, S.C.

July 28-29
ASBI Seminar on Segmental Construction Practices
Hilton Sacramento West and Arden West, Sacramento, Calif.

August 4-6
PCI Quality Control & Assurance Personnel Training & Certification Schools
Embassy Suites Hotel - Nashville Airport, Nashville, Tenn.

October 6-8
PCI-FHWA National Bridge Conference
Abstracts due April 2, 2008
Rosen Shingle Creek Resort, Orlando, Fla.

November 2-6
ACI Fall Convention
Renaissance Grand & America's Center, St. Louis, Mo.

November 3-8
PCI Quality Control & Assurance Personnel Training & Certification Schools
Embassy Suites Hotel - Nashville Airport, Nashville, Tenn.

November 17-19
ASBI International Symposium on Concrete Segmental Bridges
Abstracts must be submitted by January 31, 2008
Fairmont Hotel, San Francisco, Calif.

T.Y. LIN INTERNATIONAL EXCELS

Feedback from peers and community, plus partnership approach create 'grand experience' that keeps designers energized and innovative

WITH PROJECT PARTNERS' INPUT

by Craig A. Shutt

Not all designers appreciate the extensive schedule of public feedback and input being used today when new bridge projects begin. These processes can extend the design time making the schedule critical and can create demands that are challenging to balance. But designers at T.Y. Lin International (TYLI) relish those projects, as the feedback expands their horizons and generates new ideas.

"We always try to partner with those involved in the project, whether they are other designers, community leaders, or government representatives," says John Haussmann, President of the San Francisco-based engineering firm. "We like to have team involvement on all of our projects. We don't want to work behind closed doors without receiving input from others."

Design charrettes are a key element that can aid this process, he notes. "Talking with the community and all the people involved in the project while someone organizes and facilitates the process, creates a grand experience. Ideas are put on the table and discussed in an atmosphere of cooperation and communication. We promote the idea of holding charrettes, especially early in the process when all the ideas can be incorporated more easily into the design."

The Olympia-Yashiro Friendship Bridge in Olympia, Wash., completed in 2003, features post-tensioned concrete box girders and an aesthetically pleasing design for this highly visible public project. Photo: Steve Vento.

'More owners are partnering with design-build firms to achieve their design goals.'

A Concrete Future

Dr. Man-Chung Tang, Chairman of the Board at TYLI, sees a bright future for the use of concrete in bridges. "Construction technology for prestressed concrete bridges has fully matured," he told ***ASPIRE***™ "It is now absolutely possible for us to build durable concrete bridges that can last well over 100 years."

Concrete has proven itself worthy of being the dominant bridge material, he adds. "In the next century, concrete will remain the main construction material for bridges, especially for short and medium spans, which are the majority of bridges in the world."

High performance concrete is a key to providing more design solutions, he says. "We should emphasize the development of high performance concrete (HPC). It will offer new possibilities for bridge construction. If further development can improve the workability of high performance concrete, we will even be able to use concrete for very long spans." He notes that HPC with a strength of 30,000 psi is now available, but it is difficult to apply.

Designers must always continue to look at new materials and new techniques, he says. "As bridge engineers, we should not limit ourselves to the use of only steel or only concrete." As an example, he points to TYLI's design for the 330-m (1080-ft) -long span of the Shibanpo Bridge, the world's longest box girder bridge span, which features both concrete and steel. "I believe, with such hybrid combinations, we can build box girders up to 500 m (1650 ft) in length. Undoubtedly, combinations of steel and concrete can lead to a variety of combinations."

Dr. Man-Chung Tang
Photo: ©lasvegasphoto.com.

Close Cooperation

A prime example of this close cooperation can be seen in the firm's design for the Olympia-Yashiro Friendship Bridge on 4th Avenue in Olympia, Washington. The bridge crosses a waterway and an active rail line. The number of piers in the water was minimized to mitigate wildlife concerns while avoiding the foundations of the existing bridge.

The firm led a design team of structural engineers, civil engineers, and architects to create both a replacement post-tensioned, concrete box girder bridge and corridor improvements through the downtown area. These were aimed at improving the pedestrian and vehicular experience and promoting alternative modes of transportation. "There was a high degree of collaboration between engineer, architect, and public artist," Haussmann notes.

Five structural concepts were developed that expressed a variety of aesthetic options. The selection process was conducted through an advisory panel, which was established to advise the City Council on which structure best enhanced the city. Topics of great interest included retaining characteristics of the existing structure, vehicle barrier types and locations, pedestrian railing types and locations, inclusion of public art, and expanding the waterfront walk to the bridge.

Collaboration also comes to the fore when the company serves as the owner's representative on a project, reviewing

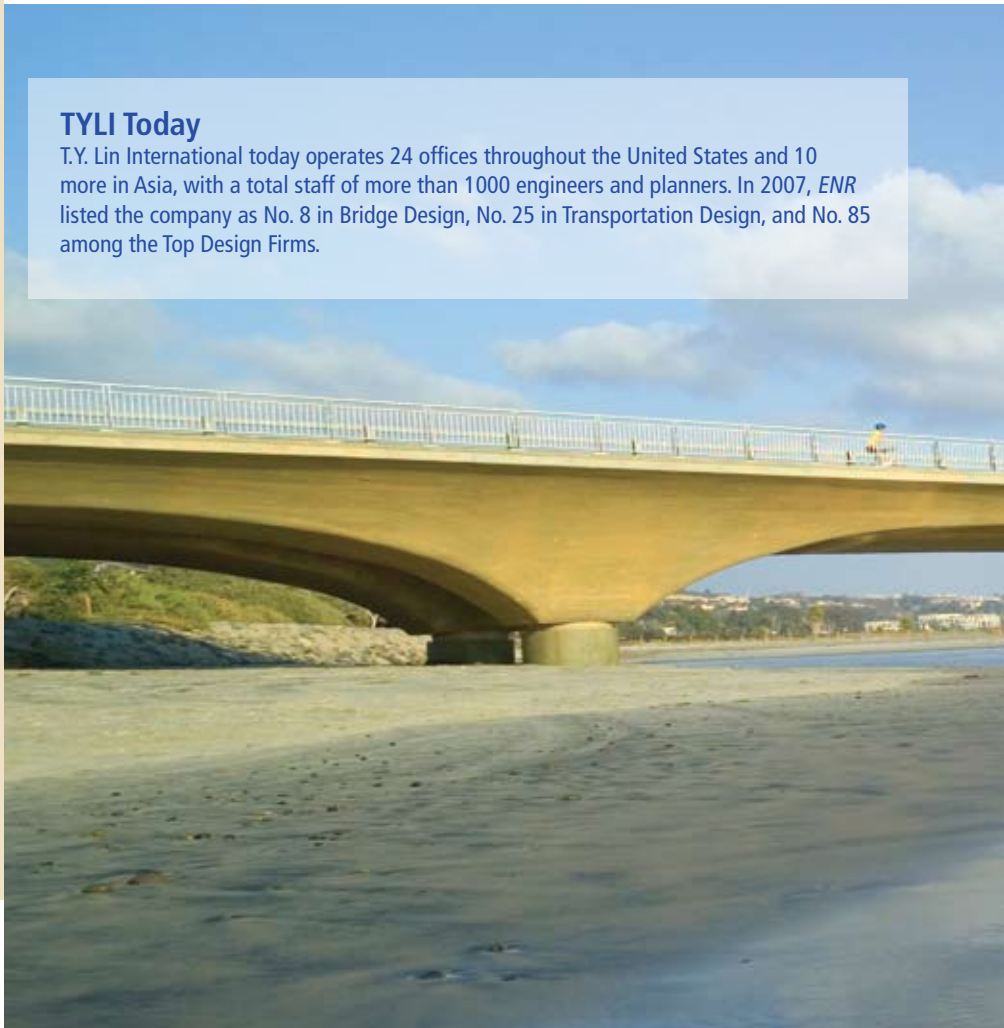

TYLI Today

T.Y. Lin International today operates 24 offices throughout the United States and 10 more in Asia, with a total staff of more than 1000 engineers and planners. In 2007, *ENR* listed the company as No. 8 in Bridge Design, No. 25 in Transportation Design, and No. 85 among the Top Design Firms.

Included in the $5.5-billion San Francisco-Oakland Bay Bridge East Span Seismic Safety Project is a 1.6-mile-long twin concrete segmental skyway. The project is the largest public construction contract in California history. Photos: Caltrans.

proposals and making recommendations without doing the design work directly, he notes. "These reviews should be an open process, where we talk about assumptions and ideas upfront and have a chance to explain techniques," he says. "That cooperation helped create a successful design for The Arthur Ravenel Jr. Bridge over the Cooper River in Charleston, South Carolina." TYLI led design reviews for the South Carolina Department of Transportation, working with bridge designer Parsons Brinckerhoff in New York to create the longest cable-stayed bridge in North America.

The design features a 1546-ft-long main span with a total cable-supported length of 3296 ft. The approach structures use three types of precast concrete bulb-tee girders, AASHTO Type III girders, post-tensioned deck panels, and mechanically stabilized earth walls. The project won the award for Best Bridge Design with Spans Greater than 150 Feet in the 2007 PCI Design Awards Competition.

Haussmann expects this type of representative work to continue to grow. "We're finding that more and more Departments of Transportation and other bridge authorities are getting into projects that are larger than they've

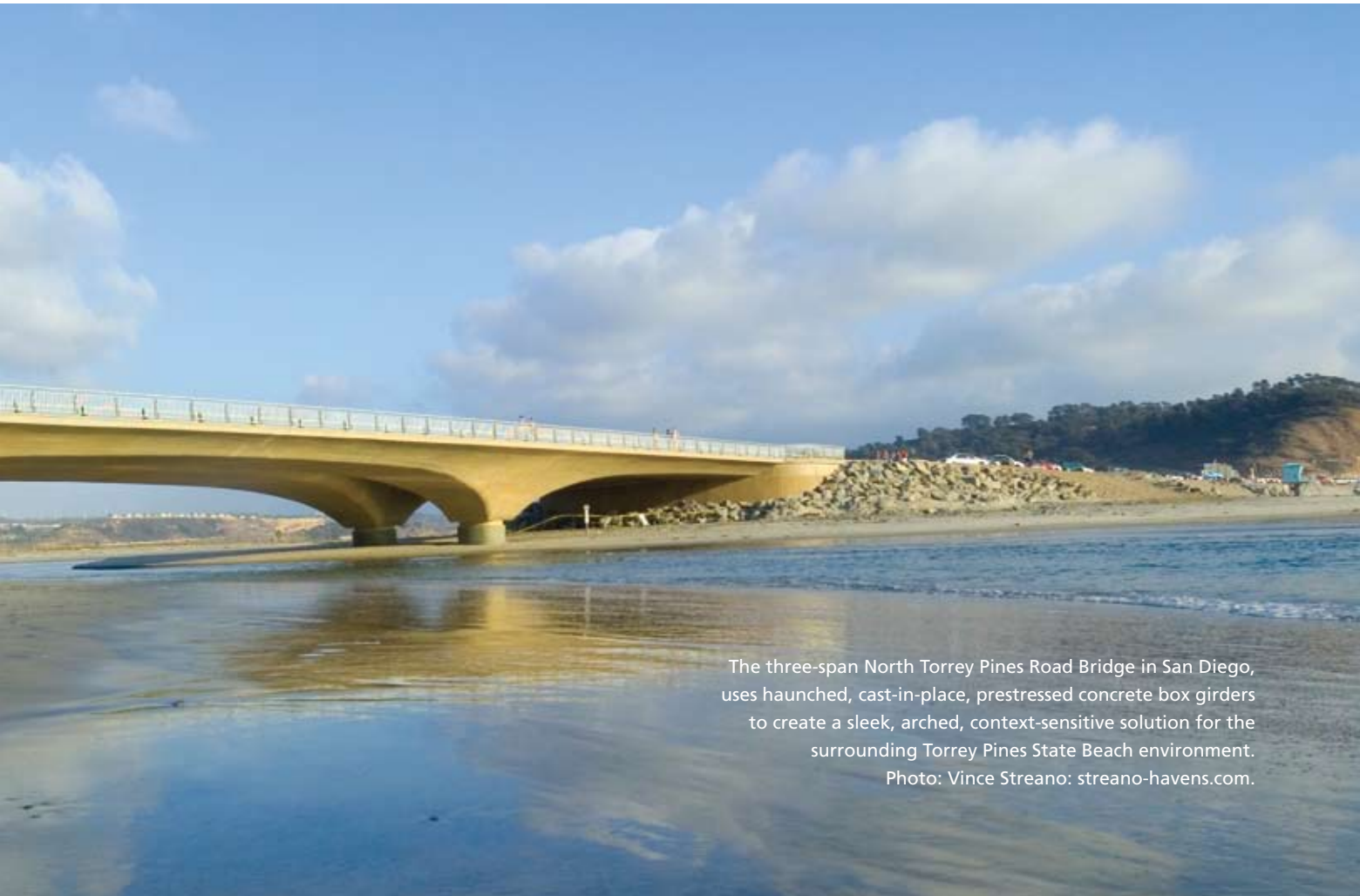

The three-span North Torrey Pines Road Bridge in San Diego, uses haunched, cast-in-place, prestressed concrete box girders to create a sleek, arched, context-sensitive solution for the surrounding Torrey Pines State Beach environment. Photo: Vince Streano: streano-havens.com.

The new Benicia-Martinez Bridge is built of sand-lightweight concrete, cast-in-place segments with span lengths of 418 to 659 ft. Photo: T.Y. Lin International.

ever done, bigger than their in-house staff can design," he explains. "As a result, they are looking to the design community to create ideas that will solve these challenges. The fun part is the technology transfer that occurs between the bridge owners and the other designers who become part of the process. We all learn new techniques, and there's a huge amount of energy created in the discussions."

Design-Build Approaches to Grow

He also sees this communication and partnership approach growing as design-build projects become more dominant. "Design-build has proven itself to be a legitimate option as a delivery system today, especially on larger projects with specific time constraints," he says. "It has become the project-delivery system of choice in many cases, and more owners are partnering with design-build firms to achieve their design goals."

No matter the challenges it faces either as owner's representative or as engineer of record, TYLI's designers quite often design a structure that meets all of the client's needs using prestressed concrete. "We design a wide variety of concrete bridges, with steel bridges in the mix, when appropriate," he says. "We decide on each approach on a case-by-case basis. But the flexibility and economics provided by concrete today makes it a very strong choice."

That's particularly true as aesthetics become more critical, he adds. "Aesthetics are a key concern for communities, because most structures today are being placed into the built environment, where there are more concerns about appearance and impact. The footprint of the bridge and touchdown points, certainly, will affect the infrastructure, and communities are concerned about the skyline and how the projects will blend in." Concrete offers great potential for meeting any aesthetic needs required, from arched shapes to unusual textures. "The public gravitates to these designs and their unique look."

A unique look was a key consideration for the Hoover Dam Bypass Bridge now under construction between Clark County, Nevada, and Mohave County, Arizona. "The new Colorado River Bridge runs just south of the Hoover Dam and will be forever tied to that majestic landmark," explains Haussmann. As a result, its design had to complement "an internationally recognized structure nearly unsurpassed in its grandeur."

To achieve that, TYLI engineers led a team that also had to decrease traffic congestion, protect the environment,

and increase safety and security. The new 580-m (1914-ft) -long bridge will be the longest concrete arch span in the country when it is completed. The arch is not only cost effective, but it complies with the environmental impact statement commitment to minimize obstructions to the view of the nearby dam.

The arch also allows for the efficient use of materials, Haussmann notes, in that both concrete and steel are used to the best of their ability: concrete in compression and steel for tension and bending. The combination of the economical twin-rib concrete arch and lightweight steel superstructure allows rapid, efficient construction.

Appearance and environmental impact also were critical considerations for the firm's work on the North Torrey Pines Road Bridge over Los Panasquitos Creek in San Diego, California. TYLI designed a haunched, three-span, cast-in-place, prestressed concrete box girder structure with a length of 340 ft. The replacement bridge was built in two stages so that vehicular, pedestrian, and bicycle traffic could be maintained throughout construction.

The bridge crosses an environmentally sensitive coastal lagoon and is located at the Torrey Pines State Beach. As a result, the structure receives heavy pedestrian usage both on top and passing underneath. The combination of the spectacular site and high profile called for special attention to appearance. The designers commissioned the project architect and artist to provide recommendations for aesthetic treatments.

CAD Helps Visualize Projects

Presenting aesthetic designs to community and political leaders has been made significantly easier with the improvements in CAD design software and other computer presentation programs, Haussmann notes. "We can place the bridge designs into the settings where they will be located and show different options and alternatives for decks or piers. We can present three-dimensional flyovers of even basic AASHTO girder designs, and it makes a huge difference in how the designs are received. People give us an overwhelmingly positive response, because we can show how graceful and complementary the bridge will be to the surroundings."

Concrete's versatility aids that process tremendously, he adds. "Projects are becoming more costly today and take a lot of public funds, so communities want more interesting aesthetics to justify those costs. If you can provide an aesthetically pleasing design, you will gain public support."

Concrete bridges also provide excellent life-cycle costing, he notes, which adds more benefits. "Economics have changed from considering only the construction cost to looking more at maintenance needs," he stresses. "We promote concrete options when the span lengths and aesthetics provide solutions, but life-cycle costs are the biggest issue and probably the biggest reason we use so many concrete designs."

'The flexibility and economics provided by concrete today makes it a very strong choice.'

The Hoover Dam Bypass Bridge features a composite concrete deck arch that complements the nearby dam and spans the 800-ft-deep Colorado River gorge. The 1914-ft-long bridge will be the longest concrete arch span in the United States when completed. Photos: T.Y. Lin International.

'If you can provide an aesthetically pleasing design, you will gain public support.'

Concrete projects long have been a staple of the company, since its founder helped establish the precast concrete industry with his work in the field during the mid-twentieth century. "Professor T.Y. Lin was a very big proponent of concrete designs, and his knowledge and enthusiasm for the material led to a lot of innovations," says Haussmann. "He truly helped bring the industry to where it is today."

He notes that only about 60 percent of the company's revenues are derived from bridges, a point some of the firm's bridge design competitors are quick to bring up. "But we are such a large firm that even at that mix, we still design 10 times the number of bridges of many other firms." A larger number of those structures are pedestrian bridges, he adds. "Those projects lend themselves to new ideas, especially with lightweight concrete and other innovations, so there are many ways to create innovative designs for those structures. Our ideas are being well received."

New Ideas Needed

There will be a need for new ideas in the future, he adds, especially with less steel availability and stricter environmental demands eliminating some classical concepts from the available options. "Our job in the design industry is to work with organizations, material suppliers, technocrats, and academia to find solutions."

A glimpse of what that future might hold can be seen in the San Francisco-Oakland Bay Bridge's East Span Seismic Safety Project, which TYLI designed in a joint-venture agreement with Moffatt & Nichol. The design, which Haussmann calls "one of the first signature bridges of the twenty-first century," replaces the 2.1-mile eastern span of the Bay Bridge and includes the world's longest, single-tower, self-anchored suspension bridge.

The replacement arose in response to the 7.1-magnitude Loma Prieta earthquake, which caused a 50-ft-long section of the east span to collapse. Officials at Caltrans determined that rehabilitation was not sufficient, and TYLI designers competed with engineers around the world to design multiple replacement bridge prototypes during a fast-track initial concept stage.

The designs were presented to a Bay Bridge Design Task Force and a 34-member advisory panel through a process coordinated by the Metropolitan Transportation Commission. "Those groups are really the best at organizing local community leadership to gain good, effective feedback," he says. "Having a singular community task force responsible for doing that helps make it easier for the owner and design team to provide concept designs with cost estimates in place and for everyone to see what the project will look like."

The winning concept was an asymmetric, self-anchored suspension bridge with a 1263-ft-long main span and a 1.6-mile-long twin concrete segmental skyway with 520-ft-long spans. The skyway design includes cantilevered bicycle/pedestrian paths on the east side, aesthetic lighting, and provisions for future light rail (see *ASPIRE*,™ Winter 2007). The last two precast concrete segments of the skyway structure were lifted into place in December 2006, creating a significant milestone. The $5.5-billion project is the largest public construction contract in California's history.

"There are a lot of smart folks in the bridge community working to create innovative designs and solve the challenges we face," he says. "I'm positive that we'll see a lot of new things coming in the next few years that will help us address how we can produce the most economical structures for every environment, every span length, and every location. I'm confident our phone is going to be ringing."

For more information on this or other projects, visit www.aspirebridge.org.

PCAP

Prestressed Concrete Association of Pennsylvania
www.pcap.org

CABA

Central Atlantic Bridge Associates
www.caba-bridges.org

Advantages of Prestressed Concrete Bridges:

Simple Design
A variety of components can accommodate various load-carrying capabilities and span potentials. Connections between elements are simple – carefully planned details result in economy.

Low Initial Costs
Prestressed concrete bridges are economical as well as provide for minimum downtime for construction. Carefully planned details speed the total construction process and result in overall economy.

Fast, Easy Construction
Construction is fast with prestressed concrete. As the beams are factory produced, site preparations can proceed. Prestressed concrete is ideal for limited access locations and where speed of erection is crucial.

Widely Used and Accepted
While prestressed concrete is a relatively new product – the first use of prestressed concrete in the United States was in a bridge, built in the early 1950s in Philadelphia, Pennsylvania – today, about a third of all bridges built use prestressed concrete beams.

Assured Quality
The quality of prestressed concrete bridges is controlled under factory conditions. Because of such protected conditions, weather can't affect the result of casting. Unlike cast-in-place concrete, precast concrete offers greater consistency and more options for high quality finish.

For more information, call us or any of our member companies:

BCP

Bayshore Concrete Products
P.O. Box 230
Cape Charles, VA 23310
Phone: (757) 331-2300
Fax: (757) 331-2501
www.usacivil.skanska.com
Email: joe.rose@skanska.com

SP Schuylkill PRODUCTS, INC.

Schuylkill Products, Inc.
121 River Street
Cressona, PA 17929-1133
phone: 570-385-2352
fax: 570-385-5898
www.spibeams.com
Email: info@spibeams.com

JPC

Jersey Precast Corporation
1000 Somerset Street
New Brunswick, NJ 08901
phone: 732-249-8973
fax: 732-249-9720
www.jerseyprecast.com
Email: jrzprecast@aol.com

NEWCRETE PRODUCTS

Newcrete Products, Inc.
P.O. Box 34
301 Plum Creek Road
Roaring Spring, PA 16673-0034
phone: 484-902-0256
www.newcrete.com
Email: rromani@nesl.com

SUSTAINABILITY
For the Concrete Bridge Engineering Community

by Dr. Tess Ahlborn

Concrete is the number one building material in the world and ranks second only to water as the most consumed substance of our time. As bridge engineers, we use concrete in every bridge project from foundations and piers to abutments, superstructures, bridge decks, and barriers. Our cultural and professional responsibility has been to design safe, economical, and constructible systems that meet the current and relatively short-term future needs of the owner and the public. While we must continue to accomplish these goals, we must also consider the impact of our choices on future generations.

Almost everyone has heard about sustainability, usually in an environmental context. As the awareness of sustainability grows, we should question whether concrete bridges can really make an impact on the sustainability movement. The intuitive answer is "absolutely; concrete structures can and do have a positive impact." This issue of *ASPIRE*™ and the next three issues focus on concepts of sustainability as they relate to concrete bridge systems.

Concepts of Sustainability

Sustainability has received vast awareness recently, specifically related to the impact that humans have on the earth's resources and environment. This attention is being focused on every aspect of our built environment; the homes we live in, the buildings we work in, the cars we drive, and the roads we drive on. Is sustainability just the next buzzword or fad? Considering how many aspects of our lives are affected, most authorities believe sustainability will become a driving force that permeates all facets of our lives.

The Daggett Road Bridge environmental constraints played a key role in determining the type of bridge. Photo: DMJM Harris.

The Fifth Street Pedestrian Plaza Bridge in Atlanta provided a pedestrian-friendly environment. Photo: ARCADIS U.S. Inc.

A sustainable design involves consideration of its impact on society, environment, and economy. A balance must exist between these three elements to provide the best solution. Sustainable designs reduce the amount of waste material, minimize the social impact of construction congestion, and cost less per year of service over the life cycle of the structure. The choices that we make not only affect the construction costs or environmental impact of a project, but clearly affect the public perception of our engineering solutions. Assessing the carbon footprint of an individual, process, industry, or country is one way to assess and quantify sustainability. However, this tends to focus only on one aspect—the environment—while diminishing the social and economic tenants of sustainability. Now, more than ever, we need innovative solutions that respond to our economic and social well-being.

"Sustainable development is development that meets the needs of the present without compromising the ability of future generations to meet their own needs."

The commonly accepted definition of sustainability, as used by the United Nation's World Commission on Environment and Development in their 1987 report titled Our Common Future, states "Sustainable development is development that meets the needs of the present without compromising the ability of future generations to meet their own needs." To the concrete bridge community, this definition means designing, constructing, and maintaining context-sensitive bridges with long-term durability, low life-cycle impacts, sensitivity in the selection of materials and methods, and a minimal impact on the environment throughout the bridge's life.

Moving Forward from Common Practice

The bridge engineering community has been practicing many sustainable concepts for decades. Rapid construction, contractor alternate designs, value engineering, lean manufacturing, and extending service life through reliable and durable systems all contribute to sustainable practices. Rapid construction concepts incorporate a get in, get out, and stay out philosophy, while demonstrating improved quality through rigorous quality control and assurance. These concepts limit the adverse affects of detours and traffic congestion on commuters and local businesses. Contractor alternate designs

Life Cycle of Concrete Bridges

The life cycle of a bridge plays an important role in determining the sustainability of the system. Life cycles can be evaluated in terms of environmental or economic impacts. Assessing the life cycle can help us become more aware of sustainable solutions for bridges. Life-cycle models, whether through assessments, inventories, or cost analysis, are complex and rely on consistent and available historical information.

Life-cycle assessment (LCA) is an environmental analysis and considers the many stages of a bridge's life. An LCA for a concrete bridge would include such items as the extraction of natural resources to produce the cement and aggregate, the manufacturing process (whether cast-in-place or precast), and the decommissioning or reuse of the structure. LCA also assesses the environmental impact of the construction techniques used initially in addition to the maintenance, repair, and rehabilitation segments of a bridge's life. A comprehensive summary of the environmental impact of a bridge can be gained through LCA.

Life-cycle inventory (LCI) is the primary component and the first step of LCA. It accounts for the environmental impact of each component of a bridge independently. For example, LCI data on cement and concrete production, such as that published by the Portland Cement Association (http://www.cement.org), is separate from the data related to bridge inspection. Inspection data leads to a better understanding of overall bridge durability and a maintenance schedule. Detailed information is gathered for the raw materials and the embodied energy necessary for each segment. Because the largest component of embodied energy of a concrete bridge comes from the production of cement, reducing cement content or replacing it with supplementary cementitious materials can often considerably lower the embodied energy of the entire system.

Life-cycle cost assessment (LCCA) is common for the purchase of many fixed assets and allows for a more holistic evaluation of costing rather than basing decisions solely on the initial costs. A discounted cash-flow analysis using estimates of costs throughout the various life stages of a bridge is used to convert costs to an equivalent uniform cost for comparison purposes.

Bridge inspection, implemented only about 30 years ago, is a necessary requirement for today's aging infrastructure (see "Safety and Serviceability on page 47). Preventive maintenance can significantly improve the life of a bridge. We must insist that preventative maintenance budgets be an integral part of a bridge's life and not be reduced or eliminated under budget constraints. Historical information is somewhat unreliable through searchable databases, as many states overwrote data with updated inspection information keeping previous records only in paper copy. But we cannot allow the need for digital historical data to impede the progress and implementation of new technologies. As bridge management systems are refined and cost data is collected, life-cycle costs will become less subjective.

and value engineering allow the owner to consider alternatives and reduce initial costs or long-term maintenance and repair. Efficiency in the plant or on-site contributes to optimized manufacturing of concrete systems and better use of resources.

Extending the service life of a structure, through better materials and adaptable designs translates to less time and energy spent on maintenance and future reconstruction. Through the precepts of the Highways for LIFE Program (www.fhwa.dot.gov/hfl), a structure that meets both the needs of today and those of the future will not require premature replacement. For example, the removal from service of a bridge that no longer meets the functional needs of the user should be avoided when the structural integrity does not warrant replacement.

The Mill Street Bridge in Epping, New Hampshire, was built in only 8 days to minimize construction-related traffic delays and improve work zone safety.

Sustainable Bridge Solutions

There are many design concepts that can assist designers in creating the most sustainable bridge solutions including teamwork, rating systems, and innovation.

The concept of teamwork centers around the idea that all parties must coordinate efforts for bridge projects so that sustainable goals can be met for every new and rehabilitated bridge. One example is the Green Highway Partnership (www.greenhighways.org). This is an overarching initiative for creating and promoting sustainable transportation infrastructure through partnerships between organizations and industry.

While there are no established sustainability rating systems for bridges, many of the sustainable construction practices encouraged in the building rating systems are applicable. Whereas the building rating systems consider occupant comfort and energy conservation, bridges need to consider the effect that construction and maintenance will have on the users of the bridge. Life-cycle costing can show that long-term cost savings on bridges are realized through the use of durable, long-lasting materials.

The building sector, through the U.S. Green Building Council, has developed and published a highly recognized rating system to assist key stakeholders in understanding and assessing the environmental impact of choices made regarding building systems. While the Leadership in Energy and Environmental Design (LEED) rating system does not directly apply to the transportation infrastructure, the concrete bridge sector can easily borrow many concepts to show how sustainability and concrete technology merge to provide systems with fewer impacts.

Such considerations include the following:

- Concrete bridge decks have a higher solar reflectance than other bridge deck materials, reducing the heat island effect in urban areas;
- Construction waste management can be improved for better utilization of materials and resources;
- Paints, stains, and sealers range in volatile organic compound emissions and should be considered along with the durability of such components;
- Simple solutions incorporating alternative transportation modes, such as bicycling and walking, should always be considered;
- Site work solutions, such as planting native landscaping, may reduce run-off and result in more efficient drainage systems;
- Rapid construction and prefabrication drastically reduce congestion, hours and fuel spent in delays, and hours spent working in hazardous construction zones; and
- Concrete, whether cast-in-place or precast, is produced locally, using local workers without the cost and effects of lengthy hauling distances.

Materials and resources should be considered for all stages of a concrete bridge's life, from using regional materials to increasing the recycled content of concrete without compromising durability. Although portland cement manufacturing produces only 1.5 to 2.0 percent of CO_2 emissions in the United States, the use of supplementary cementitious materials, such as fly ash, ground-granulated blast-furnace slag, and silica fume can have an impact on reducing the quantity of portland cement used while finding positive beneficial ways to utilize industrial by-products and produce better performing concrete. In general, the use of these materials improves the long-term durability of concrete.

Undoubtedly, the most important element from the LEED rating system that applies to concrete bridges is the encouragement of innovation. New developments in concrete materials technology, durable structural details, improved maintenance, and low life-cycle costs, can all lead to more sustainable systems.

A Place for New Technologies

Moving the industry forward in sustainable fashion, through engineering, production, and construction, while recognizing the importance of inspection and maintenance or repair, will require the implementation of new technologies. Innovation can be adopted in many aspects of a concrete bridge, through many stages of its life. Some aspects include cement and aggregate type, concrete mix proportioning, and new reinforcing materials.

Consider the use of innovative materials such as ultra-high performance concrete (UHPC). This material provides a new approach to long-term durability with compressive strengths from 25,000 to 30,000 psi and a corresponding high tensile capacity. UHPC has a high cement content, nearly 1200 pcy—twice the amount used in a concrete mix for most bridge decks. While first impressions may exclude the use of UHPC solely based on cement content, significantly more efficient structural design may require only one quarter of the material. Or, the material may lend itself to new hybrid solutions. Combine that with UHPC's long-term durability and the bridge life may easily exceed a few hundred years with little preventative maintenance required.

Reinforcing steels used in concrete bridges will also be affected by new technologies. While reinforcing steels are made from nearly 100 percent recycled material, changes to material content or coatings, and the use of high performance concretes can improve the durability through enhanced corrosion resistance and protection. Reinforcing materials with higher strengths are being investigated for incorporation into the AASHTO's LRFD Bridge Specifications under research sponsored by the National Cooperative Highway Research Program (www.trb.org/CRP/NCHRP/NCHRPProjects.asp).

Lightweight aggregates, particularly those engineered from natural resources can improve the sustainability of concrete. Lightweight aggregates and lightweight concrete require less fuel to transport. Other engineered lightweight aggregates, including by-products of other manufacturing processes, may provide sustainable solutions if performance can be documented. In addition, we must understand the energy consumption and environmental impact of producing such aggregates relative to aggregates in use today.

The Role of Engineering Education

Educating the bridge engineering community about sustainable solutions is needed at all levels, from the new graduate to the seasoned engineer. As an engineering professor, I am often asked "how does one engineer sustainability?" Students today are being introduced to sustainable concepts through general education. In fact, the Accreditation Board for Engineering and Technology (ABET) criteria provides a framework for including sustainability in undergraduate programs. Economics and ethics are a necessary foundation for understanding the impact of innovative technologies on our society. Graduate programs are expanding to include sustainability certificates; thereby, encouraging students to embrace social and economic aspects in parallel to their engineering studies.

Educating the bridge engineering community about sustainable solutions is needed at all levels.

Continuing education for practicing engineers can be acquired through conferences that sponsor sustainability sessions covering the basic principles, case studies, and panel discussions nationally and internationally. Magazines like *ASPIRE*, which reach the entire spectrum of public and private stakeholders in the bridge community, can provide education on timely topics related to sustainability. While the bridge engineering community is well on its way, we will need to improve our ability to apply life-cycle costs, understand life-cycle inventories, and integrate life-cycle assessment into our projects.

Research, a key component in today's engineering community, can lead to better understanding of sustainable solutions. Even ideas for reuse of concrete bridges once they reach their service life should be considered. Research funding is often limited, but intrigue and necessity will continue to move our technologies forward.

Closing Remarks

Engineers and engineering design practices will have a significant impact on a sustainable future. We have the ability to set policy towards sustainable solutions for the transportation infrastructure, refine our nation's best practices, and implement new technologies. The initiatives that the concrete bridge engineering community are undertaking, including the sustainability efforts of the sponsors of *ASPIRE* and agencies such as the FHWA, AASHTO, and NCHRP, will lead to more sustainable bridges and a more sustainable future.

Whether you are a state or federal employee, county engineer or commissioner, design consultant, contractor, supplier, academic, or a member of the many organizations affiliated with concrete bridges in the private, rail, or highway system, sustainability must take a front seat. A balance must exist between the social, economical, and ecological benefits of a bridge design. Topics linking sustainable development and concrete bridge technology in upcoming *ASPIRE* articles will contribute to your awareness of these important issues and be your driving force for sustainable concrete bridges.

A truly sustainable concrete bridge will meet context-sensitive concerns for the society it serves, optimize materials used, reduce environmental impacts through innovative technologies and efficient systems, improve durability to withstand the environments of the future, and have lower life-cycle costs than other structural systems. Most importantly, the concrete bridge industry's grand challenge is to merge our current culture with one that considers sustainability, recognizing that we are only beginning to plot our direction to the future.

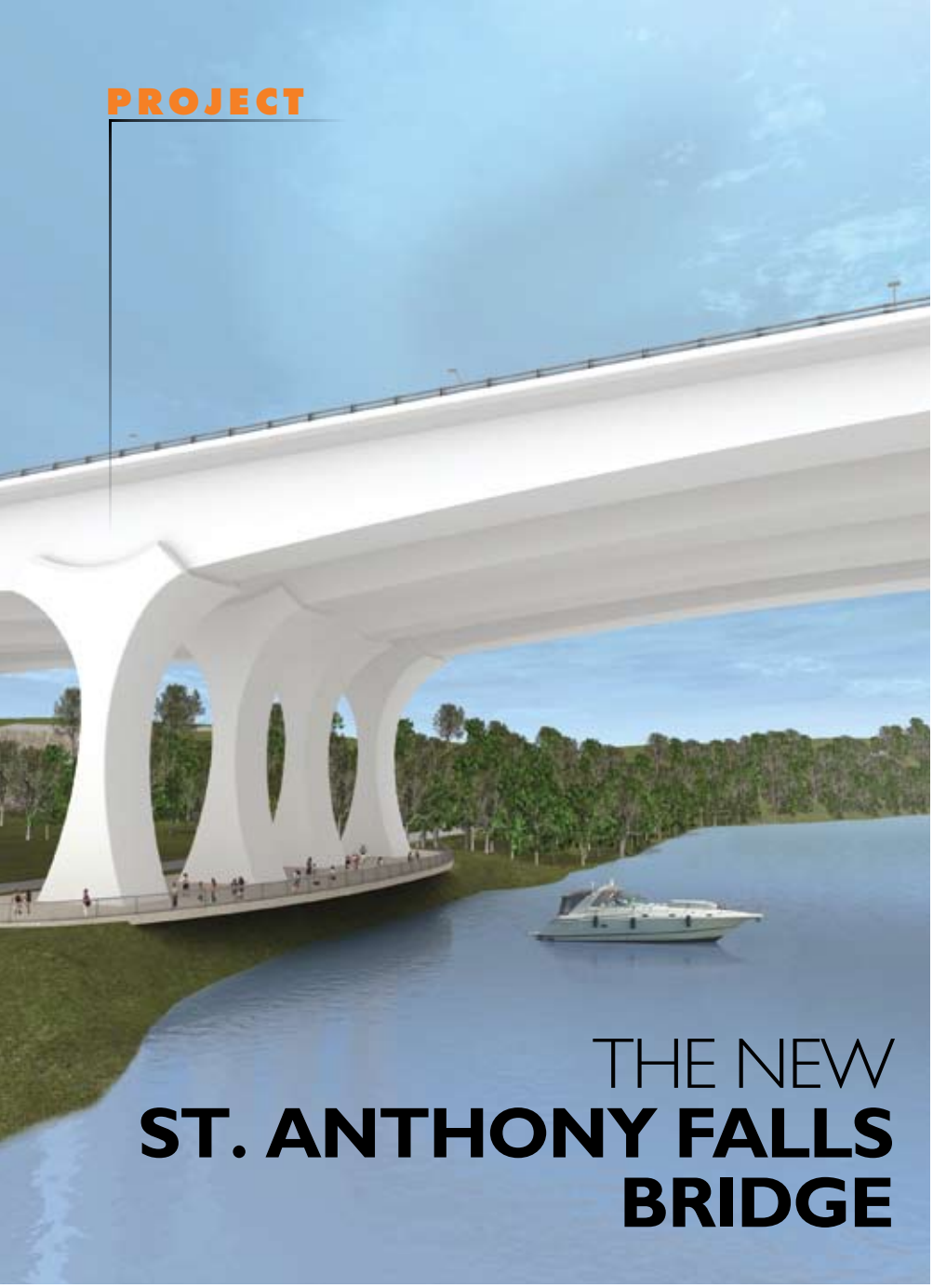

THE NEW ST. ANTHONY FALLS BRIDGE

by Jon Chiglo, Minnesota Department of Transportation and Linda Figg, FIGG

A Modern Concrete Bridge Spanning the Mississippi River in Minneapolis

The new St. Anthony Falls (I-35W) Bridge will be a modern concrete bridge spanning the Mississippi River with a 504-ft-long main span and a focus on the future. On October 8, 2007, the Minnesota Department of Transportation (Mn/DOT) awarded the design/build contract for this important bridge to a joint venture of Flatiron Constructors Inc. and Manson Construction Company, with Johnson Brothers in a key support role. FIGG is leading the design phase of the project for the construction joint venture and is engineer of record for the new bridge, with TKDA of St. Paul, Minnesota, responsible for general civil, storm water/drainage, 2nd Street overpass, and other engineering support services. Oslund and Associates from Minneapolis is responsible for the landscape design.

The successful past working relationships between members of the team on other design/build bridges over major waterways helped prepare them for the challenge of completing the design and construction of this $234 million project in 15 months, or by December 24, 2008. Construction activities officially began on site November 1, 2007, with the drilling of a test foundation shaft. Mn/DOT and the design/build team are committed to creating a new bridge with the top priorities of safety, quality, and a world-class design that reflects the community's values.

As the design was underway, the community received an opportunity to select their preferences on various aesthetic aspects during a full day FIGG Bridge Design Charette™ held on October 24, 2007. A cross section of the community including residents, business people, government officials, representatives of the cultural arts, University of Minneapolis, and others, voted on a curved pier shape, open railing for new vistas, bridge color of white, native stone gabion walls, and feature lighting.

The bridge will be 1219 ft long with twin structures, each 90-ft 4-in. wide, using two box girders per structure; thereby, providing multiple levels of

The superstructure of the 504-ft-long main span consists of four variable-depth precast concrete segmental box girders supported on 70-ft-tall piers on each side of the river. Photos: FIGG.

This sculptured bridge theme of arches, water and reflection was developed to create a consistent concept, as well as to develop all elements in the same family.

structural redundancy. Span lengths are approximately 319, 504, 248, and 148 ft. The bridge design criteria required 10 lanes of traffic with future accommodations for light rail and bus rapid transit or HOV. The sweeping variable depth superstructure has an arching parabolic curve, which varies in depth from 25 ft at the main piers to 11 ft at the center span over the river and seamlessly connects to 70-ft-tall piers anchored on each side of the river. The main span will use precast segmental construction and the long-line method of construction with four casting lines, while the approach spans will be cast-in-place concrete on falsework.

The smooth surfaces of the superstructure box girders feature inclined walls and continuous flat planes. As a result, the appearance is sculptural; the shape and concrete material combine to create a visually clean and quieter space under the bridge. The bridge layout and shapes maximize openness and green space, providing new opportunities for observation platforms, landscaping, recreation, and reflection along the river in the area underneath the bridge, beside the waterway.

Designing and Building for Safety

Both the design and construction focus on safety. During design, emphasis is given to multiple levels of structural redundancy, low maintenance, and providing a high tech, high performance bridge utilizing "smart" technology. Sensors positioned at key locations in the structures will communicate real time information and monitor the long-term bridge performance, relay weather conditions, and provide data during construction. Utilizing local material resources, local labor, and precasting at the project site results in energy-efficient construction and a sustainable bridge. The project is environmentally friendly by minimizing equipment in the river, collecting storm water, and preserving an historic wall.

A Modern Concrete Bridge for the Future

The new bridge is expected to open to traffic by December 24, 2008; within 15 months of notice to proceed. It is a bridge for the future, designed and constructed for safety, quality, and aesthetics. It demonstrates the versatility of concrete to address the function, while enhancing the form. This bridge will be a new resource to reflect on as communities look ahead to the replacement of deficient bridges and strengthening our economy for future generations.

Jon Chiglo is Project Manager with the Minnesota Department of Transportation and Linda Figg is President/CEO/Director of Bridge Art with FIGG.

Context Sensitive Solution

The elegant simplicity of the design was chosen after careful review of the context of the site. The region demonstrates a strong value for historic preservation like the Stone Arch Bridge, Mill Ruins Park, St. Anthony Falls, and the 10th Avenue Arch Bridge. Then juxtaposed to these structures is a passion for the modern, like the Guthrie Theater and the Weisman Art Museum. Each structure is appropriate to its time and place along the river valley. The bridge crosses the river immediately below the only falls along the Mississippi River, St. Anthony Falls, a National Historic Site. For the new bridge to gracefully coexist in harmony with the environment, it was important that it be respectful of the forms and materials of its neighbors and complement, without overpowering.

A theme was developed to create a consistent concept and develop all elements in the same family. In keeping with the features of the site, a theme of ***"Arches, Water, Reflection"*** was chosen. ***Arch*** forms are incorporated with graceful proportions and elegant simplicity in the connecting elements of the bridge and its site. The project centerpiece, ***Water***, is framed as a point of interest, bringing the focus back to the Mississippi River and ***Reflection*** is both the literal reflection captured by the shapes, natural light, and water, as well as the spiritual reflection that this bridge site evokes. The site itself is a dense urban area congested by utilities, rail lines, and local streets, which required special attention to geometric enhancements for improvement of future overpass constructability and ramp access safety. The project site has many unique challenges requiring special attention to the alignment geometry, foundation configurations, and types and construction techniques. These include a capped environmental site on one end, three roadways, bike-trail pathways, two large storm water outfalls, guide wall for the Corps of Engineers navigation locks, deep foundations from the previous bridge, dredged spoil site, historic wall, railroad track, future transportation corridor, and steam line/utility tunnels. Using four parallel concrete box girders, each with their own series of identical piers provided the flexibility to accommodate the existing site requirements.

For more information on this or other projects, visit www.aspirebridge.org.

Fifth Street
Pedestrian Plaza Bridge

by Jim Aitken, ARCADIS U.S. Inc.; Mike Clements, Georgia DOT; and Tim Schmitz, formerly with ARCADIS U.S. Inc.

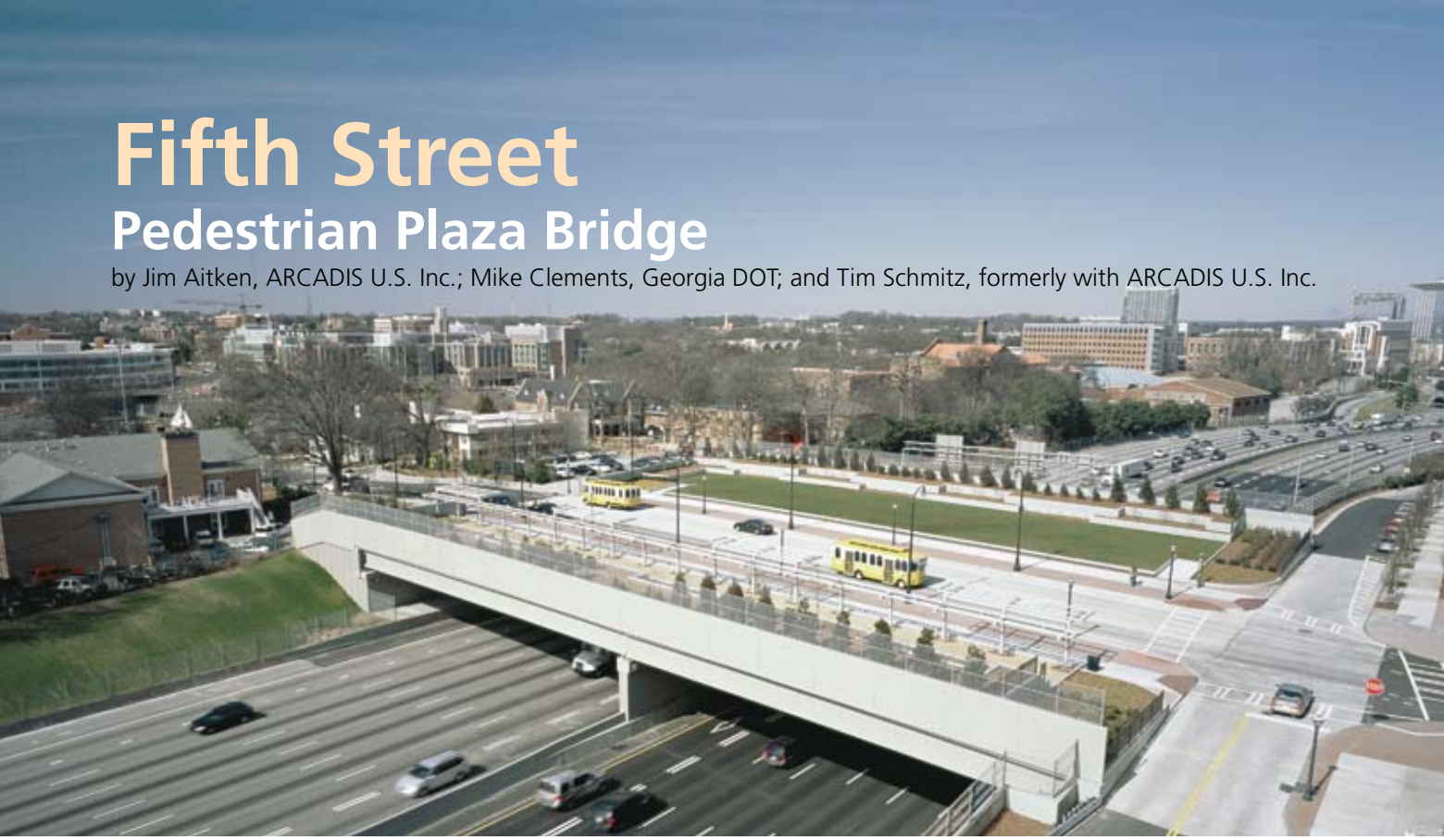

The newly constructed Fifth Street Bridge over I-75/I-85 provides a user-friendly environment with a roadway, traffic lanes, bicycle lanes, sidewalks, lawns, and planters. Photo: ARCADIS U.S. Inc.

Reconnecting Neighborhoods in Midtown, Atlanta

Original Fifth Street Bridge. Photo: Sunbelt Structures Inc.

Located in the heart of Midtown, the recently completed Fifth Street Bridge is quite unlike other bridges that cross the I-75/I-85 downtown connector in Atlanta, Georgia. At bridge level, it is difficult to tell that this is a bridge at all. It more closely resembles a small park with wide sidewalks, grassy lawns, shrubbery, and benches. Trees and a trellis provide shade from the intense summer sun that beats down on Atlanta.

The new Fifth Street Bridge reconnects neighborhoods that were once isolated from the downtown area by the 16 lanes of northbound and southbound traffic on I-75/I-85. It links the main Georgia Institute of Technology campus to the university's east campus at Technology Square, which was completed in 2003. Technology Square is home to a hotel and conference center; the College of Management; Georgia Tech Global Learning Center; Economic Development Institute; Center for Quality Growth and Regional Development; Georgia Tech Bookstore; and a host of restaurants, shops, and other businesses. The entire Midtown community is now unified by this inviting green span that provides a pedestrian-, bicycle-, and transit-friendly connection over the vehicular traffic that uses Atlanta's streets daily.

The original Fifth Street Bridge was constructed in the mid-1980s as a two-span, continuous steel-plate-girder

profile

FIFTH STREET PEDESTRIAN PLAZA BRIDGE / ATLANTA, GEORGIA

ENGINEER: ARCADIS U.S. Inc., Atlanta, Ga.

TIEBACK WALL ENGINEER: Hayward Baker Inc., Alpharetta, Ga.

ARCHITECT: Smallwood, Reynolds, Stewart, Stewart & Associates, Atlanta, Ga.

PRIME CONTRACTOR: Sunbelt Structures Inc., Tucker, Ga.

PRECASTER (BEAMS): Standard Concrete Products, Atlanta, Ga., a PCI-Certified Producer

PRECASTER (MSE AND MISCELLANEOUS PRECAST PANELS): MC Precast Inc., Atlanta, Ga.

AWARDS: *2007 PCI Bridge Design Award for the Best Non-Highway Bridge and Co-Winner of the Best Sustainable Design*

Precast, prestressed concrete beams were selected as the most economical solution.

bridge, 228 ft 4 in. long and 70 ft 5 in. wide. The roadway carried four 12-ft-wide lanes and two 8-ft-wide sidewalks. Concrete parapets with a chain link fence formed the railings on each side of the bridge. The end bents were constructed on retaining walls at each end, with a cast-in-place (CIP) wall at the west end and a tieback wall at the east end. During the construction of Technology Square, Fifth Street underwent a major renovation that featured wide sidewalks and special lighting, both on and off campus. To complete the renovation, Georgia Tech initiated a meeting with the Georgia Department of Transportation (GDOT) officials to discuss replacement of the Fifth Street Bridge.

The university wanted a signature bridge that would create approximately three-quarters of an acre of green space with 25-ft-wide sidewalks to match the sidewalks at the ends of the bridge, as well as planters, benches, decorative lighting, and a trellis to serve as a shaded area for the campus trolley stop. The walls and planters would be wide enough and high enough to obstruct the view of the interstate below the bridge. In addition, the original plan called for removal of the existing bridge and completion of the traffic lanes and sidewalks of the new bridge, without interruption to vehicular or pedestrian traffic, by the beginning of the 2006 football season. The total bridge width, including roadway, bicycle lanes, sidewalks, lawns, and planters, would be 250 ft 3 in. However, the Federal Highway Administration required that the proposed structure provide for future high-occupancy vehicle expansion of the downtown connector. Therefore,

A wide sidewalk and trellis were used on the south side of the plaza.
Photo: ARCADIS U.S. Inc.

it was necessary to increase the bridge length to 256 ft 6 in. and reduce the bridge width to 223 ft 3 in.

GDOT decided that the best way to meet the requirements of all parties involved was to award the project as a design-build project with an accelerated schedule. Ten design-build teams submitted Statements of Qualifications in November 2003, and a shortlist of five teams was released in February 2004. The project was advertised in April 2004 and awarded to the winning team of Sunbelt Structures Inc. (Sunbelt) and ARCADIS in June 2004. The entire process was greatly accelerated, especially in the planning stages. On average, a GDOT project of this size and nature takes approximately 10 years from the initial concept to the letting phase, whereas Fifth Street took just 10 months. Notice to Proceed was issued July 22, 2004.

ARCADIS served as the project designer and performed all roadway, drainage, electrical, and structural design, with the exception of the abutment at the east end of the bridge. Hayward Baker Inc. designed this abutment as a tieback

Planters were used on the north side of the bridge to hide the interstate.
Photo: ARCADIS U.S. Inc.

wall abutment due to the presence of an existing tieback wall that complicated the design and construction. The contractor, Sunbelt, was responsible for construction of the entire project.

The new Fifth Street Bridge is a two-span bridge with span lengths of 137 ft and 119 ft 6 in. Precast, prestressed concrete beams were selected by the design-build team during the prebid phase as the most economical solution for the new structure. The final design used twenty-eight 74-in.-deep modified AASHTO bulb-tee beams in span 1. The modifications consisted of increasing the depth of the bottom flange and width of the beam by 2 in. over the entire height of the beam to fit an additional strand per row in the bottom flange and web. Span 2 used twenty-six 74-in.-deep bulb-tee beams without the additional 2 in. width. The large dead loads associated with the landscaping, planters, and sidewalks necessitated the use of the deep beam and modified section. In addition, the beams were designed and constructed using high performance concrete with a 28-day specified compressive strength of 10,000 psi and 0.6-in.-diameter strands. Structural steel diaphragms made up of 6 x 6-in. angles were used instead of GDOT's typical CIP concrete diaphragms. These were installed more quickly and provided lateral support to the beams almost as soon as they were erected.

PRECAST, PRESTRESSED CONCRETE / GEORGIA DEPARTMENT OF TRANSPORTATION AND GEORGIA INSTITUTE OF TECHNOLOGY, ATLANTA, GA., OWNER

PRECAST SPECIALTY ENGINEER (MSE WALLS): Reinforced Earth Co., Norcross, Ga.

PRECAST SPECIALTY ENGINEER (PLANTER WALLS): Wolverton & Associates, Duluth, Ga.

BRIDGE DESCRIPTION: Two-span bridge with precast, prestressed concrete beams and cast-in-place concrete deck supporting unusual loads including planting areas up to 9-ft high

STRUCTURAL COMPONENTS: 74-in.-deep bulb tees, modified 74-in.-deep bulb tees, planter walls on bridge, mechanically stabilized earth wall panels, and cast-in-place concrete deck

BRIDGE COST: $10.12 million

The walls and plantings are the most important aesthetic feature of the new structure.

The planter walls also had to be considered in the design of the beams because of their effect on the distribution of the sustained dead load of the landscaping on the bridge. The density of normal landscape fill for plantings ranges from 110 pcf to 120 pcf. GDOT decided to use a special lightweight organic soil with a density of 90 pcf to help reduce weight, but the loading was still significant. ARCADIS was concerned that the effect of the deep wall sections would be to distribute a greater percentage of the dead load to the beams under the landscaping, particularly under the walls, instead of being evenly distributed to all of the beams in the cross section. This type of loading was not addressed by the project specifications, so ARCADIS verified the actual load distribution using a finite element model. The model used plate elements for the deck and beam elements modeled at the center of gravity of each precast girder. The steel diaphragms were also included. The girders were then analyzed using conventional methods (Leap's CONSPAN software) and verified with GDOT's in-house prestressed concrete beam design program. The results of the model confirmed that the planter loads would be distributed to the girders under the landscaping. Had this analysis not been performed, the girders immediately adjacent to the planters may have been under-designed.

Trellis on the south side of the bridge provides shade. Photo: ARCADIS U.S. Inc.

A pile bent and mechanically stabilized earth (MSE) wall system comprise the west end bent, while a tieback wall abutment supports the east end bent. The center wall pier of the existing bridge was widened, and the existing cap was modified to accommodate the new concrete beams. The design and construction of the east abutment were complicated by the presence of an existing tieback retaining wall and an existing CIP retaining wall just in front of the new wall. The abutment was constructed using secant-drilled shafts, supported by deep-tension micropiles. The shafts and tension micropiles were founded on bedrock. However, where the old foundation of the existing CIP wall interfered with shaft construction, the drilled shafts were founded on top of the old footing, and compression micropiles were drilled through the footing and founded in bedrock to support the shafts.

The final and, perhaps, most significant challenge was to complete the project without disrupting traffic on either the Fifth Street Bridge or the interstate over the entire two-year construction period. Lane shifts and closures were permitted on I-75/I-85 but were subject to time limits, as well as liquidated damages. Work-hour limitations were also in effect for special events in the area, such as sporting events, concerts, and festivals. Traffic on the Fifth Street Bridge itself was maintained by reducing the number of lanes to one in each direction. Using the staged construction scheme, the widened part of the structure was built first, and then traffic was shifted to the newly constructed portion of the bridge so the remainder of the bridge could be constructed.

The exterior beams under the walls and landscaping had to be spaced closer together due to the effect the walls had on the dead load distribution. Photo: Sunbelt Structures Inc.

The structure was completed and opened to traffic in December 2006, just 29 months after Notice to Proceed was issued.

Jim Aitken is the Structures Department Manager for ARCADIS' Atlanta office, Mike Clements is a Design Group Leader in the Office of Bridge Design at the Georgia Department of Transportation, and Tim Schmitz, formerly with ARCADIS, was the structural designer for the project.

For more information on this or other projects, visit www.aspirebridge.org.

Providing a Pedestrian-Friendly Environment

The new bridge provides a roadway that is 48 ft wide, the same width as the original structure. However, it carries only two lanes of vehicular traffic; the remaining width is dedicated to bicycle and turning lanes. Each side of the roadway has a 24-ft-wide sidewalk. While the total bridge width is 223 ft 3 in., more than 125 ft are landscaped areas, with 75 ft on the north side and more than 50 ft on the south side.

Benches for seating are provided on each side of the bridge. On the south side of the roadway, a trellis provides a bench with shade. On the north side, sloped walkways give pedestrians access to an area of lawn. Decorative lighting illuminates the sidewalks and landscaping on both sides of the bridge. Precast concrete walls separate each of the lawn and landscaped areas from the pedestrian and roadway areas.

The planting plan included multi-tiered planting areas that range in height from 1 ft 6 in. to 9 ft. The walls and plantings are the most important aesthetic feature of the new structure and define the character and nature of the new space on Fifth Street. The design called for the walls to be CIP, but Sunbelt decided to precast the walls on site. Special counterforts were designed to replace the CIP system to support the walls.

DEVIL'S SLIDE **OPENS POSSIBILITIES**

by Kevin Harper,
California Department of Transportation

The segmental cantilevers of the west bridge (southbound) extend out over the environmentally sensitive valley where even foot traffic is prohibited.

California engineers and contractors are closely watching this segmental, cast-in-place concrete bridge, which may create new approaches in the state.

California bridge designers and contractors have not built many segmental bridges, owing to their expertise with other types of construction. But a bridge project now underway along the Pacific Coast Highway in northern California, and another following shortly behind, may open the door to more such projects, particularly in areas with difficult terrain or with requirements for large falsework openings.

The project, which consists of two side-by-side curved bridges, is located about 18 miles south of San Francisco between Pacifica and Montara and will connect Highway 1 to the north portal of two tunnels running through San Pedro Mountain. Each three-span bridge is approximately 1000 ft long and 29 ft wide. Two sets of twin piers on each side of the valley support 445-ft-long, cast-in-place concrete box girder main spans. Because of the structures' curved design and the shape of the valley, the end spans for the west structure are significantly longer than the end spans on the east bridge. The west bridge end spans are 281 ft and 251 ft while the east bridge spans are 230 ft and 225 ft. The concrete has a specified compressive strength of 6100 psi.

Balanced Cantilever Approach Used

Caltrans engineers designed the bridges to be constructed by the balanced-cantilever method without falsework under the cantilevers. However, the contractor is using a balanced-cantilever approach that incorporates falsework for the end spans. This method still eliminates the need for falsework in the main span, where it would interfere with the environmental constraints. But it retains falsework for the end spans, which is the method most familiar to contractors in the state.

profile

DEVIL'S SLIDE BRIDGES / PACIFICA, CALIFORNIA

ENGINEER: California Department of Transportation, Sacramento, Calif.
PRIME CONTRACTOR: Disney Construction Inc., San Mateo, Calif.
CONTRACTOR'S ENGINEER: Nutt, Redfield & Valentine (NRV), Sacramento, Calif.
CONCRETE SUPPLIER: Central Concrete Supply Co. Inc., South San Francisco, Calif.
FORM TRAVELER AND POST TENSIONING SUPPLIER: Schwager Davis Inc., San Jose, Calif.
TRAVELER FORMWORK: DOKA, Little Ferry, N.J.

The designers' bridge model shows the design for the completed Devil's Slide tunnel project. The bridges connect existing Route 1 to the North Portals of the tunnels by passing over the environmentally sensitive coastal wetlands in the valley below.

The center span's balanced cantilevered method eliminates the need for falsework at the bridge's center, where it would interfere with the environment.

The bridges were designed according to project specific design criteria that incorporate portions of the Caltrans LFD Bridge Design Specifications (based on the AASHTO Standard Specifications 16th edition), 1999 AASHTO Guide Specifications for Segmental Concrete Bridges, and the Caltrans Seismic Design Criteria. TDV RM2006 software was used by Caltrans' engineers to analyze for construction loading, live load, and seismic response. SAP2000 and Wframe were used for the pushover analysis.

The successful contractor has no previous experience with segmental bridge construction. To some extent, that would be true for many contractors in the state. They have become proficient in using falsework, to heights of 150 ft and greater, and conditions haven't necessitated finding other approaches. So there have been few designs that used segmental construction. But because of the environmental impact in this case, cantilevered, segmental construction provided the best option.

The bridges are part of an emergency project to relocate a portion of the scenic Highway 1 inland away from a large landslide area known as the Devil's Slide. The goal is to realign the highway through San Pedro Mountain with a double-bore, 4200-ft-long tunnel and approaches outside the influence of the active landslide. The bridges will join a host of scenic bridges located along this famous route, most notably the Bixby Creek Arch Bridge to the south and the Golden Gate Bridge to the north.

The bridges pass over a valley and are about 130 ft above the valley floor at their highest point. To ensure no personnel, equipment or falsework entered the wetland boundary, a main span of 135.8 m (445 ft) was needed to span the environmentally sensitive area. The alignment required a total bridge length of 296 m (972 ft) with a portion of the bridges on a tight, horizontal curve with a radius of 260 m (853 ft).

The bifurcated pier table is first constructed on falsework on each side of the piers. For the end spans, the three 15-m (49.2-ft) -long segments are cast on falsework. The nine main span segments with lengths of 4.1 m or 5.0 m (13.5 ft or 16.4 ft) are constructed using a pair of form travelers.

Temporary concrete ballast blocks are used on the end-span segments to keep them from lifting off the falsework, as three main-span segments are progressively cast after each back-span segment. A closure is then cast

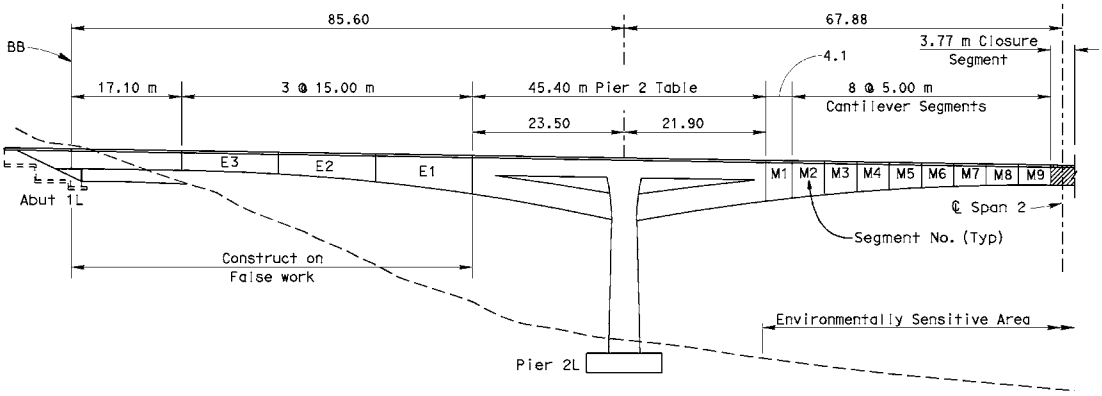

The bridges are being constructed by a balanced-cantilever approach that incorporates falsework in the end spans and form travelers in the main spans over the environmentally sensitive area.

CAST-IN-PLACE CONCRETE SEGMENTAL BOX GIRDER / CALIFORNIA DEPARTMENT OF TRANSPORTATION, OWNER

REINFORCING STEEL SUPPLIER: Pacific Coast Rebar, San Diego, Calif.

DRILLING & SHORING SUBCONTRACTOR: Drill Tech Drilling & Shoring, Antioch, Calif.

BRIDGE DESCRIPTION: Two side-by-side cast-in-place segmental concrete bridges connecting to tunnels being bored through San Pedro Mountain

STRUCTURAL COMPONENTS: Cast-in-place concrete box girders with a main span of 445 ft; west bridge end spans of 281 ft and 251 ft; east bridge end spans of 230 ft and 225 ft

BRIDGE CONSTRUCTION COST: $33.07 million

Aesthetics were given a top priority on every section of the bridge.

at midspan. When the west bridge segments are completed, the travelers will be moved to the east bridge to start the process all over again.

The bridge construction is expected to be completed in 2008. The 30-ft-wide tunnel excavations connecting to the bridge at their north portals, are to be completed in 2011.

Second Project Underway

A similar project has begun construction approximately 200 miles to the north at the South Fork Eel River Bridge. It is part of an emergency project to relocate about 1.5 miles of Route 101 away from an active landslide known as Confusion Hill. Awarded to MCM Construction, it also will provide California bridge contractors with more experience in segmental bridge construction.

Form travelers are used to construct the main span cast-in-place segments over the environmentally sensitive valley below.

The project relocates the highway from the east side of the river to the west side via two bridges. The north bridge features a prestressed cast-in-place, slant leg, box girder bridge that is about 150 ft above the river and is being constructed on falsework. The larger southern bridge is 275 ft above the river, requiring a different construction method. It is a segmental cast-in-place box-girder constructed by the balanced cantilever method similar to the Devil's Slide project except a traveler also will be used on the end span side of the cantilever instead of falsework. The tall bridge piers are hollow, with highly confined corner elements. That project is scheduled for completion in 2009 and will be featured in a future edition of *ASPIRE*.™

Three additional large, balanced-cantilever segmental bridges are being designed by Caltrans for later construction. The Antlers Bridge on I-5 over Lake Shasta, the Lake Britton Bridge on State Route 89, located in northern California, and the Pitkins Curve Bridge on State Route 1 in Monterey County will all use this approach due to the unique constraints of their locations.

The competition among local contractors, and the awarding of the Devil's Slide and South Fork Eel River bridge contracts to local firms, bodes well for the continuation of this approach for more California bridges. As contractors become familiar with it, more will enter the bidding processes, and their bids will become even more competitive.

While the main span segments are cast using a form traveler, the end span segments, which are outside the environmentally sensitive area, are cast on falsework. The abutment retaining walls mimic the shape of the rounded exterior girders to give the impression that the bridges continue on into the hillside.

With local companies experienced in falsework becoming willing to embrace the segmental construction method, attitudes within the local construction industry are likely to change in favor of this method. That will be especially true for project locations with difficult terrain or with requirements for large falsework openings. Such a change should help create more cost-efficient bridges, as well as meet the environmental challenges that certainly will continue to grow.

Kevin Harper is Bridge Engineer with the California Department of Transportation, Sacramento, California.

For more information on this or other projects, visit www.aspirebridge.org.

Bridge Aesthetics Were Crucial

Because of its location, bridge aesthetics were critical to the design, and public input reinforced that need. A standard monolithic structure was not considered adequate mitigation at the site. Given the restraints of the site and the design criteria, the segmental, cast-in-place, box girder bridge was selected as the best approach.

Aesthetics were given a top priority on every section of the bridge. Near the piers, the variable-depth superstructure bifurcates vertically into two distinct elements, with an upper box girder and a lower box girder strut element that gives the bridges a graceful, shallow arched appearance. The bridges also incorporate special aesthetic treatment on the abutments and retaining walls, as well as including specially designed "see through" concrete barriers and custom bicycle rails.

Environmental Protection

The bridges pass over a valley at Shamrock Ranch, which contains a pond and wetlands that are home to the endangered red-legged frog. During construction, the wetland area has been fenced off to protect the environmentally sensitive area; thereby necessitating the use of cantilevering.

POST-TENSIONING INSTITUTE ®

One can hardly pick up a newspaper or magazine without seeing an article dealing with the safety, reliability, and environmental impact of bridges. These sustainability attributes are a growing concern and will be a significant focus of bridge designers in the foreseeable future.

The Post-Tensioning Institute's efforts dovetail well with these concerns and are focused on improving quality, developing effective codes and specifications, education, and providing technical guidance.

Training and Certification of Field Personnel

PTI's Bonded Post-Tensioning Installers certification program provides training on all aspects of bonded PT.

Technical Guidance

PTI has several new bridge-related efforts including:

- *PT Bridge Manual*—an update of existing PTI bridge publications
- *Post-Tensioned Bridge Decks*—a new manual to provide guidance on PT deck design and construction.
- *Stay Cable Recommendations*—the updated 5th Edition is complete and available to the public.

For more information about post-tensioning, plan to attend the **2008 PTI Technical Conference** in **St. Louis, May 4-6, 2008**.

OREGON'S BRIDGE REPAIR AND REPLACEMENT PROGRAM

by Tom Lauer, Oregon Department of Transportation

Reshaping the State's Highway System with Context-Sensitive and Sustainable Solutions

Few drivers today remember a time before interstate highways and cloverleaf interchanges allowed for the easy movement of traffic. Our modern road systems have become an integral part of our everyday lives. They provide for smooth access to just about anywhere motorists want to go and are a vital part of the distribution system that keeps stores stocked with goods.

So it was alarming to the public and freight haulers alike when in 2001, regular bridge inspections by the Oregon Department of Transportation (ODOT) showed that the state's bridges were weakening and many required immediate weight restrictions, detours, and emergency repairs. By 2003, ODOT had been forced to place weight restrictions on 140 bridges.

In March 2001, when Ford's Bridge on I-5 in southern Oregon was declared unsafe and in need of emergency repairs, the resulting detour sent large volumes of traffic—especially truck traffic—through the towns of Canyonville and Riddle for 20 days. The streets of these small towns were not designed for such high volumes of traffic. The delays in travel times associated with the detour and the disruption it caused to these two communities highlighted the seriousness of Oregon's highway bridge conditions.

The most problematic structures were the cast-in-place reinforced concrete bridges built between 1947 and 1962. A majority of these bridges (52 percent) showed diagonal-tension cracking, and nearly half of them were along the north-south I-5 and east-west

The construction method for 103 of the bridges slated for replacement has been determined, and 92 will be built from concrete.

Photos: ODOT.

The I-5 Coast Fork Willamette River Bridge is a pivotal part of Oregon's infrastructure that allows north-south travel.

ODOT's $1.3 billion OTIA III State Bridge Delivery Program is repairing or replacing nearly 300 bridges.

I-84 corridors, which carry the bulk of Oregon's commercial truck traffic. Reinforced concrete bridges built at that time were designed by a method that resulted in less shear reinforcement than is required by current design methods.

Unprecedented Investment in Bridges

The Oregon Legislature responded to this crisis in 2003 by enacting the third Oregon Transportation Investment Act, or OTIA III. The $2.46 billion package included $1.3 billion for the repair and replacement of bridges on the state highway system. Of the 365 bridges in ODOT's OTIA III State Bridge Delivery Program, the agency is repairing or replacing nearly 300 bridges on major corridors throughout Oregon in a 10-year period. OTIA III also provides funding to pave and maintain city and county roads, improve and expand interchanges, add new capacity to Oregon's highway system, and remove freight bottlenecks statewide.

For a half-century, Oregon's concrete bridges have supported growing traffic demands while requiring limited maintenance. Their prevalence has allowed engineers and contractors to hone the skills necessary to deliver bridges quickly, inexpensively, and on budget. And modern construction methods, such as precast, prestressed concrete beams, allow for speedy project completion.

On ODOT's bridge program, the construction method for 103 of the bridges slated for replacement has been determined, and 92 will be built from concrete. Eighty-three of those structures will use precast beams, and nine will be cast-in-place.

Innovative Delivery

Oregonians have not seen an investment of this magnitude in highway and bridge construction since the state's interstate freeway system was built in the 1950s and 1960s. The sheer size and scope of the bridge program meant that ODOT had to change how it does business. Were ODOT to take on the work itself, it would require a massive expansion of the agency followed by a dramatic downsizing once the work was complete. Instead, at the direction of the Legislature, the agency hired a private company, Oregon Bridge Delivery Partners, to assist in the management of the program. ODOT is making an historic shift from an agency that designs and constructs projects to one that manages the transportation system.

The bridge repair and replacement work is happening in five overlapping stages:

Stage 1, was completed in October 2006 and included repairs to bridges along the U.S. 97-U.S. 26 corridor from the California border to Portland, and from Bend to Ontario on U.S. 20. This created alternate north-south and east-west routes that truck drivers and motorists can use when construction starts on hundreds of bridges along I-5 and I-84.

Stage 2 is the largest stage, both in funding and in the number of bridges. It addresses bridges on two major passenger and freight routes in Oregon: I-84 and the northern portion of I-5 from the Washington border to the Eugene-Springfield area.

Stage 3 includes bridges on southern I-5, from Eugene to the California border, and addresses bridge improvements to a significant portion of this major freight and passenger corridor.

Stage 4 will repair or replace bridges on vital freight corridors connecting coastal communities to I-5 and I-84 as well as key north-south routes in eastern Oregon.

Stage 5 will address routes and connections for rural areas within eastern and central Oregon and the coastal corridor south of Coos Bay. These routes are critical to passenger transportation and the transport of agricultural, timber, and aggregate products.

Eighty-three of the concrete bridges will use precast beams and nine will be cast-in-place.

Economic Impact

The bridge program is having a positive economic impact on Oregon. Over the life of the program, it will sustain an average of 2500 jobs each year, the majority of which will be filled by Oregonians. One of the key legislative mandates for the bridge program is to stimulate Oregon's economy by sustaining job and contracting opportunities, from project development through final bridge construction.

The economic benefits of the bridge program ripple out beyond the construction industry to local businesses in communities across Oregon. Related businesses such as materials and equipment suppliers are seeing an increase in trade, as well as local hotels, restaurants, grocery stores, and other businesses frequented by construction workers.

Through apprenticeship and job training programs, ODOT is building a skilled, diverse construction workforce that will be an asset for Oregon long after the bridge program is complete. The bridge program is helping train workers for family-wage, sustainable careers.

By developing a range of contract sizes, ODOT is giving Oregon contractors—including women, minorities, and emerging small businesses—opportunities to compete more effectively with larger national firms. As these small businesses grow and prosper, so will Oregon.

Most recently, ODOT launched the statewide rollout of a program intended to increase contracting opportunities for small firms. Originally piloted in the Portland metropolitan area, the Small Contracting Program for Professional and Technical Services gives small firms the opportunity to be selected as prime consultants for ODOT contracts, including those on the bridge program, valued at $74,990 or less.

Tom Nelson and Associates LLC is a 17-person specialty-surveying firm whose recent work includes staking the landmark Portland Aerial Tram. Through the Small Contracting Program, the firm has just signed its first contract with the state transportation agency. "We're excited about the chance to work directly for ODOT," said Tom Nelson, owner of Tom Nelson and Associates. "As an emerging small business, we really appreciate the commitment that ODOT managers have made to finding innovative ways to get us contracted and providing services."

On the Mt. Hood to Chemult Project, contractors stripped and cleaned reinforcement and shaped it into balls for recycling. More than 720 tons of material were recycled on this project.

30,000 cu yd of rubble from one bridge was reused as aggregate on another OTIA III project.

Keeping Traffic Moving

ODOT is committed to keeping drivers, communities, and transportation stakeholders informed about construction work as it happens. The agency is working to minimize traffic impacts, to help drivers plan their trips using alternate routes, and to keep travelers informed about delays where they exist.

Strong mobility planning is helping ensure that traffic keeps moving relatively smoothly during construction work. The bridge repairs are being grouped into logical bundles along each highway corridor. Bundling reduces cost by allowing contractors to achieve an economy of scale in doing design work, ordering materials, and mobilizing equipment and resources. It also helps traffic engineers make better plans to keep traffic moving during construction.

Record-Setting Concrete Beams

Beyond the planning phase, ODOT seeks ways to reduce traffic impact during construction. Materials selection, such as using precast, prestressed concrete beams, plays a large part in ODOT's mobility efforts. For example, ODOT used record-setting beams (the largest used in Oregon's history) on two key projects early in the program. The beams allowed for faster construction by reducing the number of beams, and, therefore, hours of labor required for installation. Because the projects can be completed more quickly, the impact on mobility is lessened. That, in turn, means less lost time and frustration for commuters, truckers, and other travelers.

The beams, an engineering milestone for the state of Oregon, were the crowning achievement of the Alder Creek Bridge on U.S. 26. Each beam weighed 135,000 lb, was 162.5 ft long, 7 ft deep, 4 ft wide at the top and 2 ft wide at the bottom. A single beam used more than 1 mile of reinforcement and 2 miles of prestressing strand. Simply put, at their installation in November 2004, these were the longest precast, prestressed concrete beams ever constructed and used in Oregon.

To add to this engineering feat, the company behind the innovation, Eugene, Oregon-based Morse Bros. (now known as Knife River Corp.), broke its own record in July 2005. Less than a year after casting and delivering the seven beams to the Alder Creek Bridge project, the manufacturer turned out seven larger beams.

Precast, prestressed concrete beams speed construction and decrease traffic delays.

The dimensions of the new record-setting beams were even more impressive: Each was 183.75 ft long, weighed 179,000 lb and contained 1.6 miles of reinforcement. The new beams were the first "BT-90" precast concrete beams ever built in Oregon. Morse Bros. delivered and installed the beams—carefully coordinating two cranes, one with a 350-ton lift capacity and one with a 200-ton lift capacity—at the Union Pacific Railroad overcrossing bridge just north of Chemult in southern Oregon. More details of this project are given in the Winter 2007 edition of *ASPIRE*.™

ODOT's bridge program is leading the way with innovations such as the massive precast beams that increase public safety and mobility, while safeguarding economic and environmental resources. With economic gains reaching all corners of the state, the citizens of Oregon are reaping the benefits of this major public effort. By the time the bridge program is complete, Oregon's highway system will be ready to support the state's growing economy for decades into the future.

Tom Lauer is Manager, Major Projects Branch, Oregon Department of Transportation.

For more information on this or other projects, visit www.aspirebridge.org.

Advertisers Index

Community Values

An innovative decision-making framework is guiding the bridge program. All stakeholders—businesses, communities, and special-interest groups—are an integral part of the process, and all opinions are carefully considered in determining how the bridges will be designed and built.

ODOT's innovative delivery approach—known as Context Sensitive and Sustainable Solutions, or CS³—addresses the preservation of scenic, aesthetic, historical, environmental, economic and other community values while building safe and enduring projects. This comprehensive strategy fosters accountability to the state's taxpayers, communities, motorists, and stakeholders.

CS³ enhances ODOT's standards of project safety and reliability. To that foundation, CS³ adds attention to socially and environmentally sustainable outcomes to the design and construction processes. The goal of the sustainability component is to get the job done—to repair or replace hundreds of aging state highway bridges—in ways that not only reduce negative impacts on the environment and communities, but also extend the economic, social, and environmental benefits of the program into Oregon's future.

Through CS³, ODOT is thoughtfully repairing or replacing bridges in ways that accomplish the program's goals:

- ODOT is building bridges designed to limit their impact on the natural environment. For example, using precast, prestressed concrete beams to create single-span structures eliminates footings in streams and thereby enhances habitat.
- ODOT is monitoring construction waste and equipment emissions, materials selection, and the life cycle and durability of the bridges. On one project, recycling nearly 25,000 tons of materials from a single demolished bridge saved more than $200,000.
- ODOT is tackling critical environmental stewardship issues such as watershed health, habitat connectivity, and life-cycle impacts. For example, installing a wildlife crossing bench—a graded area that ties into flat areas above and below a bridge—helps wildlife cross underneath the Crescent Creek bridge in central Oregon.
- To comply with 14 separate environ-mental statutes and permits, ODOT and 11 federal and state regulatory agencies developed program-wide performance standards and streamlined the time-consuming permitting process.

Involving the Public

An important part of the bridge program is making sure that communities affected by construction projects have opportunities to provide meaningful input into the design and construction of bridges. Extensive community engagement was critical in the historic Columbia River Gorge National Scenic area along I-84, which winds along the banks of the Columbia and skirts the shadow of Mount Hood. It is a lifeline that brings commerce as well as tourists into and through the gorge. Along this corridor are 26 bridges slated for repair or replacement. Each offers a vantage point from which to observe the beauty of the gorge and also provides a critical economic link for local communities.

Before design began in the gorge, ODOT worked closely with community members, stakeholders, and representatives of state and federal agencies to gather input and secure buy-in on design elements ranging from abutments and railings to landscaping and wildlife crossings. The resulting I-84 Corridor Strategy provides a framework of design guidelines to help ODOT manage and improve the interstate in ways that meet public safety and transportation needs while also meeting National Scenic Area provisions. The I-84 Corridor Strategy generated national attention, too: the American Council of Engineering Companies recently recognized ODOT with the 2007 Engineering Excellence National Recognition Award for the design guidelines.

2008 Concrete Bridge Awards: Call for Entries

For entry forms and previous award winners visit www.cement.org/bridges

Sponsored by: PCA Portland Cement Association

Sponsors: U.S. Department of Transportation Federal Highway Administration; NCBC National Concrete Bridge Council; MoDOT; aci American Concrete Institute®

Organizer: PCA Portland Cement Association

ERNEST F. LYONS BRIDGE

The project was completed within budget and more than 8 months ahead of schedule.

In July of 2003, PCL Civil Constructors Inc. (PCL) was the low bidder on a $46 million lump sum design-build contract for the Ernest F. Lyons Bridge Replacement project in Stuart, Florida. The main scope of this Florida Department of Transportation (FDOT) project was the construction of a new high-level segmental bridge over the Intracoastal Waterway in Martin County, Florida. The project site is located on Florida's East Coast, approximately 45 miles north of West Palm Beach.

The new Ernest F. Lyons Bridge is a 4600-ft-long, 31-span, two-lane, precast segmental bridge built using the span-by-span method of construction. With the exception of the first span, which is 100 ft long, all spans are 152 ft in length. Typical segments were 10 ft long, 10 ft deep and 61 ft wide and weighed approximately 80 tons. Pier segments were split into two half-segments, each 5 ft long, to reduce their weight for handling. A typical span consisted of 15 precast segments that were post-tensioned together using ten 19-strand tendons. Five tendons ran along each web wall. The spans were subsequently made continuous into six-span units.

The 32 foundation units for the segmental bridge used between ten

The Ernest F. Lyons replacement bridge is a 4600-ft-long, 31-span, precast segmental bridge built using the span-by-span method of construction. Photos: Jim Schneiderman, PCL.

profile

ERNEST F. LYONS BRIDGE REPLACEMENT / STUART, FLORIDA

DESIGN ENGINEER: Parsons Transportation Group, Jacksonville, Fla.

PEER REVIEW ENGINEER: Corven Engineering, Tallahassee, Fla.

PRIME CONTRACTOR: PCL Civil Constructors Inc., Tampa, Fla.

READY MIX CONCRETE: Tarmac, West Palm Beach, Fla.

POST-TENSIONING: VSL, Springfield, Va.

SUBSTRUCTURE FORMWORK: Symons Corporation, Des Plaines, Ill.

AWARDS: *Florida Transportation Builder's Association "Best in Construction" award in the Major Bridge Category and an award of excellence from the Design-Build Institute of America (DBIA)*

REPLACEMENT PROJECT

by Jim Schneiderman,
PCL Civil Constructors Inc.

and fourteen 24-in. square prestressed concrete piles ranging in length from 75 to 105 ft. The bridge piers consisted of a single pile cap and a single flared column. Column heights ranged from 12 to 60 ft above the top of footing, thereby making the vertical clearance of the bridge 65 ft at the navigation channel per U.S. Coast Guard requirements.

In addition to construction of the segmental bridge, the project scope included construction of two low-level AASHTO girder bridges. Each bridge consisted of ten 50-ft spans and was constructed to provide recreational access onto spoil islands within the project limits. The two-lane bridges consisted of 24-in. square prestressed concrete piles, cast-in-place concrete bent caps, AASHTO Type II beams, and a 50-ft-wide, 8.5-in.-thick cast-in-place concrete bridge deck.

Additional improvements were also required adjacent to each of these small bridges. Specifically, 1600 ft of precast concrete sheet pile wall and 3500 tons of bank and shore riprap were installed on the approach roadways. Finally, over 2500 lin. ft of new roadway was constructed to connect these two new structures to the segmental bridge alignment.

The final phase of the scope included extensive landscaping improvements, as well as demolition of the existing bascule bridge structure constructed in 1950. The contract required all concrete portions of the existing bascule bridge to be removed and transported seven miles offshore into the Atlantic Ocean, where they were disposed of as an artificial reef.

PCL subcontracted the design services for the project to Parsons Transportation Group and the project team received the Notice to Proceed on October 2, 2003. The total project duration was 1580 days, providing for a contract completion date of February 12, 2008.

PRECAST CONCRETE SEGMENTAL / FLORIDA DEPARTMENT OF TRANSPORTATION, OWNER

BRIDGE DESCRIPTION: 4600-ft-long, 31-span, precast segmental bridge built using the span-by-span method plus two low-level recreational access bridges

SEGMENT FORMWORK: Southern Forms Inc., Guild, Tenn.

ERECTION TRUSS: DEAL, Udine, Italy

SEGMENT LIFTER: Somerset Engineers and KWH Construction Corp., Vancouver, B.C., Canada

PRECASTER FOR LOW-LEVEL BRIDGES: Standard Concrete Products, Tampa Fla., a PCI-Certified Producer

STRUCTURAL COMPONENTS: 501 precast concrete segments, 30 flared columns, and 32 foundation units with precast concrete seal slabs and ten to fourteen 24-in.-square prestressed concrete piles ranging in length from 75 to 105 ft for the main bridge and 24-in.-square prestressed concrete piles, CIP bent caps, AASHTO Type II beams, and CIP bridge deck for the low-level bridges

BRIDGE CONSTRUCTION COST: $46.5 million

501 segments were cast at a rate of three per day.

PCL was responsible for obtaining environmental permits for the project and no construction could begin until all permits had been obtained. Despite PCL's aggressive efforts to obtain all environmental permits in a timely manner, the permitting process took two months longer than anticipated. The final permit was received in August 2004, thereby allowing construction activities to begin.

Hurricane Hazards

On September 4, 2004, Hurricane Frances—a Category 2 storm—made landfall on the project site just weeks after construction had begun. The jobsite sustained minimal wind damage and a fair amount of washouts to the existing roadway caused by rain and/or wave action. Shortly after the work resumed, Hurricane Jeanne—a Category 3 storm—made landfall on September 25, 2004. The official landfall location of Hurricane Jeanne was within 2 miles of Hurricane Frances; however the damages incurred due to Hurricane Jeanne were significantly greater than those caused by the previous storm. Despite these back-to-back hurricane events, the project team recovered quickly and proceeded with substructure production work.

Foundation and substructure operations progressed uneventfully on the project between October 2004 and October 2005. As the bottom elevation of all land foundations was well below the water table, land foundations were constructed using a mud seal and sheet pile shoring system that allowed crews to dewater the excavation for footing construction. Water foundations were constructed using a precast concrete seal slab that was hung from the piles and served as the bottom form for the footing concrete. Footing and column formwork systems were designed to withstand 10 ft of liquid head during concrete placement. By doing so, crews were able to place all columns in a single lift.

Of the 32 foundation units on the project, 15 were located on land and 17 were located in the water. All piling was driven using a Delmag D-46 diesel pile hammer with a Manitowac 4100W Series 2 crawler crane. 4100W Series 2 cranes were also used in construction of the footings and columns on both land and water. In addition to the standard equipment required for land-based operations, water foundations also required the use of crane barges, material barges, and push boats to shuttle labor forces, materials, and equipment between land and water.

On October 24, 2005, another hurricane, Hurricane Wilma—a Category 1 storm—passed yet again over the project site. Fortunately, damage during this storm was not as severe as that caused by the first two hurricanes. The project team made the necessary repairs and was back on track by November 2005 making preparations to begin segment erection.

PCL's casting yard for the project was located in Fort Pierce, Florida, approximately 30 miles north of the project site. Three casting beds were used to construct the 501 segments for the project. Two casting beds were set up to construct typical segments, while a third bed was set up to be interchangeable for pier segments and expansion joint segments.

Typical segments were 10 ft long, 10 ft deep, and 61 ft wide, weighing about 80 tons.

Although the design compressive strength of the concrete for bridge segments was 5500 psi, transverse post-tensioning of the top slab could be performed once concrete had reached 2500 psi, thereby allowing the segment forms to be stripped. With the use of high early strength concrete, PCL was able to perform transverse post-tensioning and strip the forms approximately 12 hours after casting. By doing so, crews were able to cast one segment per day with each casting bed for a total of three segments per day (two typical segments and one pier or expansion joint segment). Although this rate of production is common for typical segments, it is quite an accomplishment for pier or expansion joint segments due to the large amount of reinforcing steel and post-tensioning hardware required in these segments.

Segment Erection

Due to shallow water depths on site and strict environmental permit conditions regarding protected seagrasses, PCL chose to erect the bridge segments using a top-down method. As a result, all segments were trucked individually from the casting yard in Fort Pierce to the project site.

Load limit restrictions dictated the haul route for transporting the segments from the casting yard to the project site. In addition, transportation permits only allowed segments to be delivered between 9:00 p.m. and 5:00 a.m. Due to these transportation

A self-launching underslung truss was used to support the segments.

restrictions, PCL was only able to deliver six segments each night. In order to maintain production cycles, the project team designated an area on-site with sufficient room to store one complete span of segments. As soon as the transport crew had delivered enough segments to complete one span, the erection crew was ready to erect those segments. It was a delicate balancing act that required close coordination between the transport, segment storage, and erection crews.

Also located within the on-site segment storage area was a temporary building constructed to store all bridge components that were sensitive to the elements. Specifically, this temporary structure provided storage for post-tensioning strand, cable grout, HDPE duct, and other miscellaneous but important components. Without any one of these components, segment erection would come to a halt. Therefore, it was crucial to efficiently manage the limited storage area available while maintaining sufficient inventories of each of these components.

The erection truss used by PCL during segment erection was a self-launching underslung truss. The truss was fabricated in Italy and assembled on the project site. To perform the top-down erection of segments, PCL used a specialized segment lifter. These specialized pieces of equipment coupled with the methods of erection allowed crews to consistently erect one span of bridge every four shifts.

The Ernest Lyons Bridge project was the first project to be constructed using FDOT's new post-tensioning specification. Some of the requirements of this new specification included shear transfer devices on all steel pipes within the pier segments, duct couplers at each steel pipe connection of the split pier segments and more stringent pressure tests on each tendon prior to grouting.

The segmental bridge was opened to traffic on September 18, 2006. Upon completion of the bridge, crews immediately began the final phase of the project including demolition of the existing bascule bridge. The project was officially completed and accepted by the FDOT on May 19, 2007, with a grand opening ceremony and many accolades from local residents.

Each typical span consisted of 15 segments post-tensioned together.

The specialized lifter and erection truss allowed one span of bridge to be erected every four shifts.

Despite numerous challenges encountered, the Ernest F. Lyons Bridge Replacement project was completed within budget and more than 8 months ahead of the contract schedule. In 2007, the project received the Florida Transportation Builder's Association "Best in Construction" award in the Major Bridge Category. The project also went on to receive an award of excellence from the Design-Build Institute of America (DBIA). It is truly a bridge of which the concrete industry can be proud.

Jim Schneiderman is Construction Manager with PCL Civil Constructors Inc., Tampa, Florida.

For more information on this or other projects, visit www.aspirebridge.org.

Preserving Endangered Species

This project was located in an aquatic preserve with the presence of an endangered species of seagrass and as a result, the environmental permitting requirements became quite involved. As a condition of the South Florida Water Management District (SFWMD) and U.S. Army Corps of Engineers (USACOE) permit applications, PCL was required to perform a seagrass survey to document the presence of seagrasses within the project limits. Due to the growing season of seagrass, this survey could only be performed during the month of August each year. As mentioned in the above article, the FDOT did not issue the Notice to Proceed for the project until October 2003. In an effort to expedite the permitting process, PCL performed the initial seagrass survey at their own risk during August 2003. Had PCL not performed the seagrass survey at this time, the permitting application could not have been completed until August of the following year.

The Revised FDOT
POST-TENSIONING SPECIFICATIONS

by Clyde Ellis, VSL

The Ernest F. Lyons Bridge is one of the first post-tensioned bridges in Florida to be constructed under the latest Florida Department of Transportation (FDOT) post-tensioning specifications. The FDOT rewrote the state's specifications into a five-part strategy with a goal of producing a design, construction, and maintenance environment that consistently produces durable post-tensioned bridges.

The first part of the strategy requires the use of enhanced post-tensioning systems. To ensure compliance, the FDOT approves all post-tensioning systems and lists them on the state's Qualified Product List (QPL). The qualities that constitute an enhanced post-tensioning system include: a three-level system of corrosion protection; tendons placed within plastic ducts; positively sealed duct connections; prebagged and preapproved grout for post-tensioning tendons; post-tensioning tendons capped with permanent, heavy-duty plastic caps incorporating an O-ring seal; elastomeric coating over pour-back areas; as well as pressure testing of all post-tensioning tendon ducts.

The second part requires all post-tensioning tendons to be completely filled with grout during construction. This requirement also includes the condition that all anchorages must be accessible for stressing, grouting, and inspection throughout all processes of installation and protection. To meet the third requirement of the strategy, all post-tensioning tendon anchors must have a minimum of four levels of corrosion protection. The fourth part states that the decks of post-tensioned bridges must be watertight. Finally, the fifth part of the requirements states that post-tensioned bridges must be designed to provide increased redundancy with multiple tendon paths using a greater number of smaller-sized tendons.

On the Ernest F. Lyons Bridge, the post-tensioning system, supplied by VSL, has anchorages with galvanized protection and ducts made of UV resistant-plastic to meet the new specifications. To ensure proper grouting, the anchorages have dual inspection ports through which inspectors use a borescope to determine visually if the anchorages are completely filled with grout. The system utilizes a combination of mechanical couplers and/or heat-shrink sleeves to create water and airtight connections. All admixtures used to grout the tendons are premixed and prebagged with the cement.

Florida's specifications for post-tensioning are available at Section 463 of their Standard Specifications for Road and Bridge Construction (www.dot.state.fl.us/specificationsoffice/2007BK/TOC.htm).

Clyde Ellis is Branch Manager with VSL's Washington, D.C., office.

Call for Papers

Abstracts being accepted until April 2, 2008

National Bridge Conference

Co-sponsored by the Federal Highway Administration

October 6 – 8, 2008

Rosen Shingle Creek Resort, Orlando, FL

Bridges for LIFE®

Featuring High-Performance Bridges

The PCI National Bridge Conference (NBC) is the premier national venue for the exchange of ideas and state-of-the-art information on concrete bridge design, fabrication, and construction—particularly for precast, prestressed concrete bridges. Concrete continues to grow as the material of choice for the nation's bridges. The continued interest in high-performance concrete and the growing excitement about methods for rapid construction promise to fuel this growth even more and dictate the need for this conference. Public agencies and industry have joined forces and are committed to bringing together the nation's most experienced, expert practitioners. Experience has shown the value of technology transfer that takes place at the National Bridge Conference. The NBC will be held in conjunction with the PCI Annual Convention and Exhibition.

Notice to Public Agency Engineers

Through a special arrangement with the Federal Highway Administration, state engineer speakers are eligible for travel and registration reimbursement. State your interest in reimbursement when submitting your abstract.

Conference Schedule

Monday, October 6
Keynote Address
General Session
Bridge Design Awards Presentations
"Spotlight State" Plenary Session
Technical Sessions

Tuesday, October 7
Technical Sessions
Meeting of the AASHTO Technical Committee on Concrete Design

Wednesday, October 8
Technical Sessions
Conference ends following luncheon on Wednesday

Social Events and Gatherings

Throughout the event, you'll have ample time to network with colleagues and establish or renew acquaintances. Social events include an opening reception gala, delicious buffet luncheons sponsored by our exhibitors, and a dinner banquet. Above all, you'll have the opportunity to immerse yourself in the state of the art of concrete bridges. An exciting program of tours and activities for accompanying guests is also available.

Special Bonus

Those registering for the National Bridge Conference also have the opportunity to participate in the exciting educational sessions of the PCI Annual Convention and Exhibition.

Call for Papers

PCI is currently accepting submissions for the NBC program, which will include approximately 16 technical sessions comprising 56 papers, plus an additional session with papers devoted to the featured "Spotlight State." Conference proceedings will be provided to all registrants on CD-ROM and will also be available to others following the event.

A few suggestions for topics of interest include:

- Beams with Integral Decks
- Bridge Aesthetics, Coatings, and Colors
- Bridge Repair and Rehabilitation
- Creative Concrete Bridge Solutions
- Contractor Alternates, Value Engineering, and Design-Build
- Designing and Retrofitting for Seismic Forces
- Designing to Facilitate Fast Construction
- Hauling and Transporting Studies
- High-Performance Concrete/High-Performance Solutions
- Innovative Concrete Bridges
- LRFD Issues, Research, and Monitoring
- Materials—SCC, Light Weight, High Strength
- Plant Forming/Production Reports
- Post-Tensioning Technology/Applications
- Precast Bridge Decks
- Precast Substructures
- Project Case Studies
- Research in Action
- Spliced Girder Solutions

A technical committee will review submissions. Abstracts should be no longer than one double-spaced, typewritten page; adequately describe the topic; state the author's willingness to present the paper at the National Bridge Conference if the reviewers choose the paper; Identify the intended presenter if multiple authors are listed.

The deadline for receipt of abstracts is **April 2, 2008**. Abstracts should be submitted electronically at http://www.softconf.com/start/PCINBC08/submit.html or through the link at www.pci.org.

Selected authors will be notified April 11, 2008, and final written papers are due June 16, 2008.

Requirements for papers can be found at www.pci.org.

For more information, contact **John Dick–** Tel.: (312) 360-3205; Fax (312) 786-0353; or Email: jdick@pci.org.

PCI™ Precast/Prestressed Concrete Institute
209 West Jackson Boulevard | Suite 500 | Chicago, IL 60606
Phone: 312-786-0300 | Fax: 312-786-0353 | www.pci.org

U.S. Department of Transportation
Federal Highway Administration

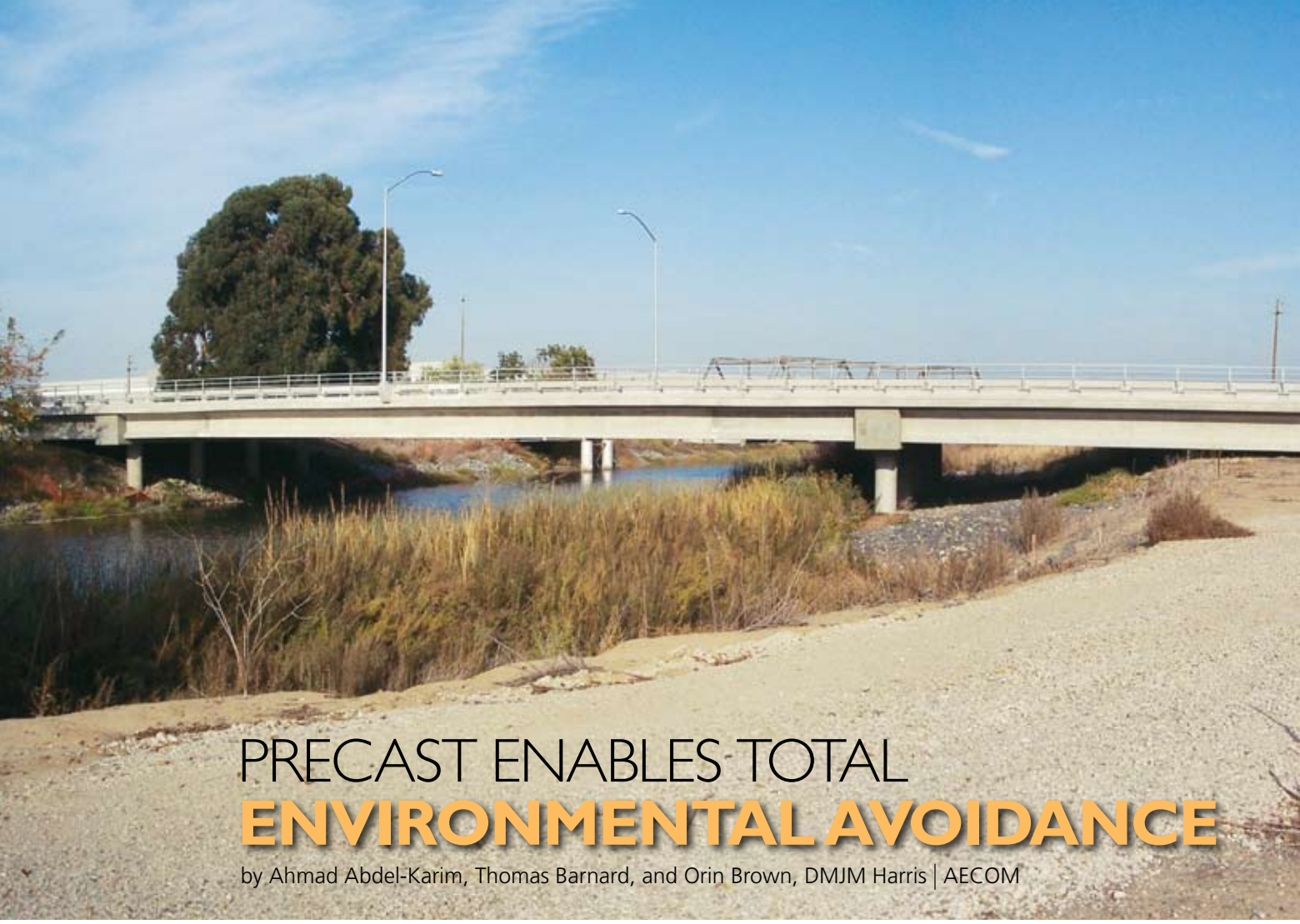

PRECAST ENABLES TOTAL ENVIRONMENTAL AVOIDANCE

by Ahmad Abdel-Karim, Thomas Barnard, and Orin Brown, DMJM Harris | AECOM

The constructed bridge provides a durable, low-maintenance solution that blends well with its surroundings

Daggett Road provides the link between California State Highway 4 and Rough and Ready Island, a former U.S. Navy facility that was recently decommissioned and turned over to the Port of Stockton, California. The new structure replaces an old steel truss swing-span bridge over Burns Cut-off with a four-lane precast concrete spliced girder bridge.

The Daggett Road Bridge consists of a three-span, spliced bulb-tee girder bridge with post-tensioned integral bent caps. Each girder line consists of three segments: two over the piers/end-spans and one middle drop-in segment. The 100-ft-long middle span drop-in segments had to be installed from cranes operating on top of the partially completed deck over the end spans. Both the framing plan and the erection scheme were necessary to avoid working in the channel.

The unusual erection scheme produced some design challenges that had to be addressed. Most of these issues were related to the critical bending moment at the face of the bent cap. The combination of pretensioning and post-tensioning chosen to satisfy the stress limits resulted in exceeding the maximum reinforcement limit. This was overcome using a combination of design changes and analysis techniques.

profile

DAGGETT ROAD BRIDGE / STOCKTON, CALIFORNIA

ENGINEER: DMJMHarris | AECOM, Sacramento, Calif.

PRIME CONTRACTOR: Shasta Construction Inc., Redding, Calif.

PRECASTER: Con-Fab California Corporation, Lathrop, Calif., a PCI-Certified Producer

POST-TENSIONING CONTRACTOR: AVAR Construction Systems Inc., Campbell, Calif.

The new bridge provides a durable low-maintenance solution that blends well with its surroundings. Photo: DMJM Harris.

Daggett Road links State Highway 4 with Rough and Ready Island. Photo: DMJM Harris.

Alternative Designs

The site constraints precluded many standard bridge types from consideration, and left precast, prestressed concrete and structural steel as the only viable alternatives. The two candidates were approximately equal in the initial estimate of construction cost; however, the estimates did not consider the significant difference in structure depth between the two and its impact on the approach roadway embankment quantities. The single-span steel alternate would have been, at a minimum, 2.5 to 4.5 ft deeper than the minimum precast, prestressed concrete bulb-tee system. This would have resulted in significant extension of the conform points, both on and off the island. Furthermore, the use of structural steel for bridge construction in California is not as common as either reinforced or prestressed concrete, and therefore comes at a premium price.

As a result, the preferred alternative consisted of a three-span, field-spliced, precast, prestressed concrete bulb-tee girder bridge. The system was the least intrusive to the sensitive environmental areas, provided reduced structure depth, facilitated more flexibility for the incorporation of aesthetics, and reduced approach roadway costs associated with the structure depth. Precasting the girders in short segments, then splicing them using post-tensioning tendons after placement, permitted the design to take advantage of the efficiency of a continuous structure without the need for extensive falsework in and around the waterway. Even with all the versatility and adaptability offered by the selected precast girder system, a special erection scheme was necessary to stay out of the channel and above the high water elevation.

Strongbacks were used to support the drop-in segments. Photo: Port of Stockton.

Eight lines of spliced bulb-tee girders were used. Illustration: DMJM Harris.

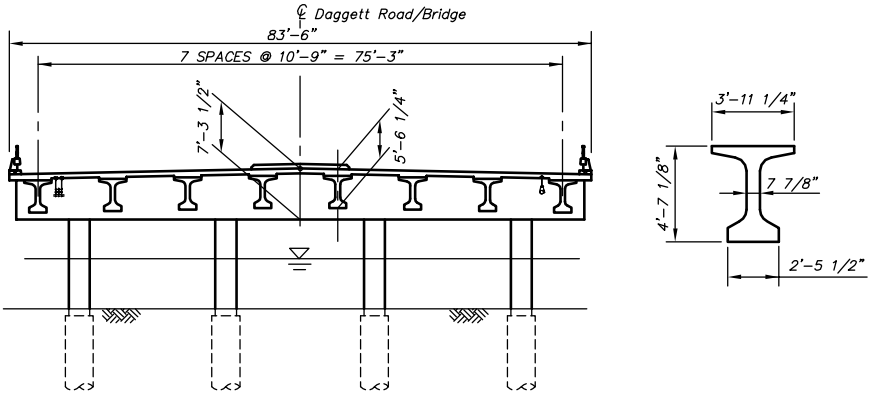

PRECAST, PRESTRESSED SPLICED GIRDER / PORT OF STOCKTON, CALIF., OWNER

BRIDGE DESCRIPTION: Three-span, spliced bulb-tee girder bridge with integral bent caps

STRUCTURAL COMPONENTS: Eight lines of spliced bulb-tee girders; cast-in-place, post-tensioned integral bent caps; cast-in-place deck slab; and cast-in-drilled hole piles

BRIDGE CONSTRUCTION COST: $150/sq ft

Bridge Superstructure

The system utilizes field splices in the middle span, thus enabling the girder segments to be shipped in reasonable lengths. The splices were located near the span inflection points, which resulted in nearly equal drop-in and pier segment lengths. The superstructure of this bridge system consists of three main components: the end span/pier segments, the middle span drop-in segments, and the cast-in-place integral bents; these components are described below.

The end span/pier segments comprised prismatic bulb-tee girders that span between each abutment and the nearest bent, and cantilever nearly 24 ft into the middle span. The girders are pretensioned for shipping and handling stresses. The pretensioning strands are all straight and are located in the bottom flange of the girder, clear of the web area that houses the post-tensioning ducts. The pier segments also contain ducts for two stages of longitudinal post-tensioning: one for the girder-only section and one for girder-deck composite section.

The middle span drop-in segments span between the cantilever ends of the end span/pier segments. They also consist of a constant depth bulb-tee shape for the positive moment region. They are pretensioned for lifting and handling stresses and contain ducts for the two-stage post-tensioning of the continuous girder and composite sections.

Cranes on the pier segments were used to erect the drop-in segments. Photo: Port of Stockton.

The integral post-tensioned bent caps transferred longitudinal moment between the columns and the superstructure. Photo: Con-Fab.

The cast-in-place integral bent system provides the connection of the precast pier segment to the columns. Each bent is a four-column, rigid frame supported on large diameter cast-in-drilled hole piles. The integral cap is formed and cast around and under the end span/pier segments, and stressed before the drop-in segments are erected, using transverse post-tensioning ducts passing through the end span/pier segments. Conventional reinforcement in the top slab and in the cap below the girders further improves the monolithic response of the integral connection. The resulting joint is capable of transferring longitudinal moment between the columns and the superstructure through torsion and shear-friction at the bent cap/girder interface.

A critical feature of the integral cap system that contributed in no small part to the success of this project is that it enabled the elimination of temporary shoring supports under the girder splices. This is possible due the inherent stability of the end span/pier segments after being rigidly connected to the columns and the subsequent casting of the deck before the drop-in segments are erected.

Construction Scheme

The key step in the construction sequence corresponds to the erection of the middle span drop-in segment (Step #3 in the sequence). This was necessary to avoid setting the cranes up on the levees or behind the abutments, where their carrying capacity would have been significantly reduced. Setting up and operating the cranes on the partially completed deck provided the logical solution.

Protecting the Environment

The project's environmental constraints played a key role in determining the type of bridge used. The project's funding was tied to a "sunset clause" with a fixed expiration date. In order to meet the funding deadline set by this agreement, it was necessary to accelerate the project by adopting a "total avoidance" strategy. As implied by the name, the alignment avoided impacts to sensitive resources and their habitats, thus reducing permitting processes from formidable to programmatic for most of the regulatory agencies involved. However, as a result of this strategy, no work could be performed in the channel below the ordinary high-water (OHW) elevation at any time during construction. These constraints precluded many standard bridge types from consideration, and left precast concrete as the only economically viable alternative. Even with all the versatility and adaptability offered by the selected precast girder system, a special erection scheme was necessary to stay out of the channel and above the specified OHW elevation. The constructed bridge provides a durable, low maintenance solution that blends well with its surroundings.

Construction sequence. Illustration: DMJM Harris.

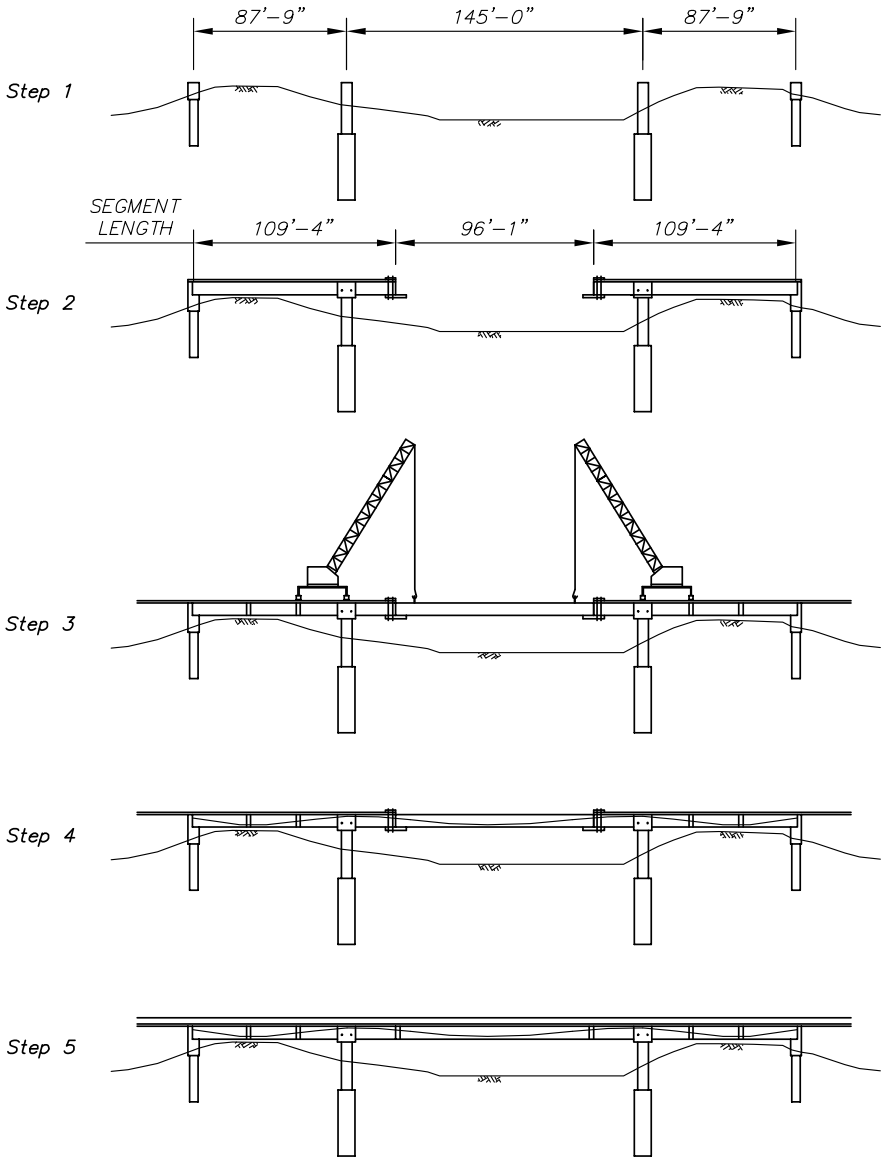

However, extensive analysis and verification was necessary to ensure that this solution was structurally viable and safe. Consultation with the precasters and crane companies yielded information about the crane's required capacity and the magnitude of its maximum anticipated reactions. This information was then used to delineate the physical limits of the permissible crane operations that did not violate the girders' temporary stress limits.

The project plans and specifications provided adequate detail to the contractor to devise an erection scheme within these limits. As an example, the plans required that intermediate diaphragms be centered under the crane outrigger pads, as determined by the contractor. This requirement was there to protect the deck slab and distribute the crane rear outrigger loads evenly among the girders. The design plans provided a variable dimension to locate the intermediate diaphragm, since the dimensions of the crane were unknown at the time of design. This process proved to be effective in avoiding potential problems and construction went exceptionally well.

Ahmad Abdel-Karim is Associate Vice President, Thomas Barnard is Vice President, and Orin Brown is Senior Bridge Engineer with DMJM Harris | AECOM, Sacramento, California.

For more information on this or other projects, visit www.aspirebridge.org.

AESTHETICS **COMMENTARY**

by Frederick Gottemoeller

For many precast concrete girder bridges, particularly low ones, the biggest aesthetic problem is often the size and shape of the pier caps. They can break up the horizontal lines of the bridge, creating a visual stop at each pier line. On very low bridges, they can look like a series of transverse walls segmenting the space under the bridge. The Daggett Road Bridge avoids these potential problems. Driven by the necessities of the site, the designers have come up with innovative techniques to raise the pier caps into the plane of the girders. The method also creates structural continuity across the piers, allowing the girders to be shallower than usual. Shallowness is especially appreciated in a structure that is low to the water like this one. The result is a graceful, well-proportioned structure that sweeps cleanly from bank to bank while leaving a significant opening below.

There is a tendency to downplay the appearance of small, out of the way bridges, like the Daggett Road Bridge. However, almost all bridges are important features in somebody's neighborhood or somebody's park. They all deserve attention to their appearance. Our goal should be to achieve efficiency, economy, and elegance on every structure. The structural innovations used in this structure would benefit the appearance of other precast concrete girder bridges, as well as create functional advantages such as longer spans. They should be considered wherever precast girders are being designed.

CONCRETE CONNECTIONS

Concrete Connections is an annotated list of websites where information is available about concrete bridges. Fast links to the websites are provided at www.aspirebridge.org.

IN THIS ISSUE

www.fhwa.dot.gov/hfl
The purpose of the Highways for LIFE (HfL) pilot program is to accelerate the adoption of innovations and new technologies; thereby improving safety and highway quality while reducing congestion caused by construction. Prefabricated Bridge Elements and Systems (PBES) is a highlighted technology on this website.

www.greenhighways.org
The Green Highways Partnership is a voluntary collaborative effort at fostering partnerships to improve upon natural, built, social, and environmental conditions, while addressing the functional requirements of the transportation infrastructure. A free subscription to their e-newsletter is available.

www.dot.state.fl.us/specificationsoffice/2007BK/TOC.htm
This Florida Department of Transportation website contains the 2007 Florida Standard Specifications for Road and Bridge Construction.

www.fhwa.dot.gov/bridge/nbis.htm
Information about the National Bridge Inspection Standards (NBIS) and the National Bridge Inventory is available from this website.

www.brisbane.qld.gov.au
This website belongs to the City of Brisbane in Australia. A search for Eleanor Schonell will provide information about their "green bridge."

http://bridges.transportation.org/?siteid=34&pageid=27
This AASHTO Subcommittee on Bridges and Structures website contains the complete agenda from their 2007 annual meeting in Wilmington, Delaware, as well as presentations from the General Session. Errata to the 4th Edition of the AASHTO *LRFD Bridge Design Specifications* are also available.

Bridge Technology

www.nationalconcretebridge.org
The National Concrete Bridge Council (NCBC) website provides information to promote quality in concrete bridge construction, as well as links to the publications of its members.

www.hpcbridgeviews.org
This website contains 46 issues of *HPC Bridge Views*, a newsletter published jointly by the FHWA and the NCBC to provide relevant, reliable information on all aspects of high performance concrete.

Bridge Research

http://ntlsearch.bts.gov/tris/index.do
The National Research Information System provides a bibliographic database of over 640,000 records of published research for all modes of disciplines and transportation.

www.trb.org/CRP/NCHRP/NCHRPprojects.asp
This website provides a list of all National Cooperative Highway Research Projects (NCHRP) since 1989 and their current status. Research Field 12 – Bridges generally lists projects related to bridges although projects related to concrete materials performance may be listed in Research Field 18 – Concrete Materials. Some completed projects are described below:

http://trb.org/news/blurb_detail.asp?id=3257
NCHRP Report 517, *Extending Span Ranges of Precast Prestressed Concrete Girders,* contains the findings of research performed to develop recommended load and resistance factor design procedures for achieving longer spans using precast, prestressed concrete bridge girders. Spliced girders were identified as the design option with the greatest potential for extending span lengths.

http://trb.org/TRBNet/ProjectDisplay.asp?ProjectID=349
NCHRP Report 549, *Simplified Shear Design of Structural Concrete Members,* contains the findings of research performed to develop practical equations for design of shear reinforcement in reinforced and prestressed concrete bridge girders. Recommended specifications and commentary plus examples illustrating application of the specifications were also developed. The results of this research have been incorporated into the AASHTO LRFD Bridge Design Specifications.

http://trb.org/news/blurb_detail.asp?id=7443
NCHRP Report 579, *Application of LRFD Bridge Design Specifications to High-Strength Structural Concrete: Shear Provisions,* examines research performed to extend the applicability of shear design provisions for reinforced and prestressed concrete structures in the AASHTO LRFD Bridge Design Specifications to concrete compressive strengths greater than 10 ksi.

http://trb.org/news/blurb_detail.asp?id=8375
NCHRP Report 595, *Application of the LRFD Bridge Design Specifications to High-Strength Structural Concrete: Flexural and Compression Provisions,* explores recommended revisions to the AASHTO LRFD Bridge Design Specifications to extend the applicability of the flexural and compression provisions for reinforced and prestressed concrete to concrete compressive strengths greater than 10 ksi.

Structurally Deficient Bridges are SAFE

by Stanley W. Woods

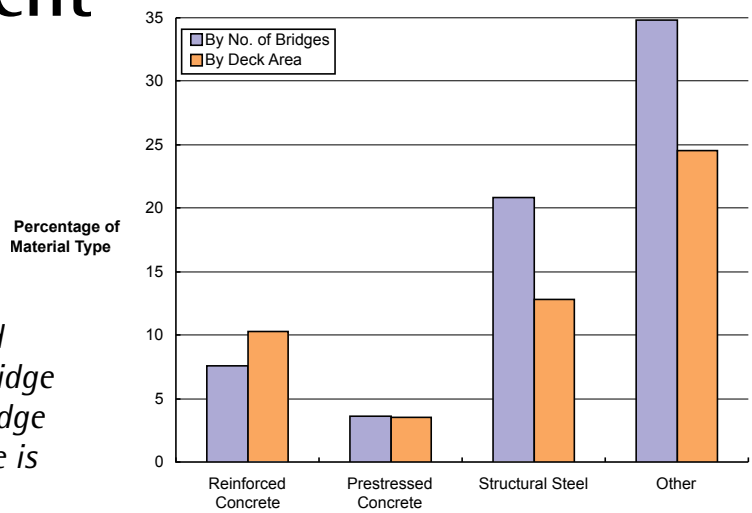

Structurally Deficient Bridges.

A Structurally Deficient Bridge, as defined by bridge engineers, indicates that the bridge is in need of maintenance. A qualified bridge engineer has either determined the bridge is safe to use or it is closed for public use.

"Structurally Deficient" is the term created by bridge engineers to indicate that a bridge is in need of maintenance, rehabilitation, or sometimes replacement. As a bridge ages, parts of the bridge deteriorate to where it becomes necessary to repair or replace the deteriorated parts or, in some cases, the entire bridge. To check for these conditions, trained bridge engineers inspect bridges every 2 years or more frequently to be sure they are safe for the designated loads. If they are not, the bridges are posted for the restricted loads that they can safely carry or are closed until they can be fixed or replaced.

Unfortunately when the term "Structurally Deficient" was implemented, little thought was given to how the general public would interpret the meaning. They could have chosen some other description such as "Time to Schedule Maintenance Work." Bridge professionals are now considering how these terms are perceived by the public and may change them.

Background

Following the collapse of a major bridge in 1967, Congress passed legislation in 1971 that required all states to inspect and maintain an inventory of all bridges on the federal-aid system. The law was expanded in 1978 to require that all bridges on public highways be added to the inventory. The law requires that all bridges be inspected at least every two years but each state must submit inspection reports to the federal government annually. The federal government maintains a National Bridge Inventory database and uses it to identify bridges eligible for rehabilitation or replacement. These data are also used to allocate federal bridge replacement funds to each state based on needs. Bridges must be classified as either "Structurally Deficient" or "Functionally Obsolete" to be eligible for funding. Functionally obsolete means that the deck geometry, clearances, load capacity, or approach roadway alignment do not satisfy the current minimum criteria.

In order to get some consistency in reporting between the states, the federal government established rules and guidelines to aid the bridge inspectors. Five major bridge items were established for rating: deck, superstructure, substructure, structural evaluation, and waterway adequacy. Each item is rated on a scale of 0 to 9, where 0 means bridge closed and 9 means excellent condition. Each number on the scale has a definition to further aid the inspectors. The values entered for these items then determine whether a bridge is classified as structurally deficient or functionally obsolete. A bridge with a condition rating of 4 or less for the deck, superstructure, or substructure or an appraisal rating of 2 or less for structural evaluation or waterway adequacy is classified as structurally deficient.

A condition rating of 4 is defined as: Poor Condition—advanced section loss, deterioration, spalling, or scour. As you can see, there is a wide variation in the definition. There can be a large difference in advanced section loss vs. some deterioration or spalling. Advanced section loss might imply serious loss of load capacity, whereas spalling might indicate the deck needs an overlay or be replaced with little or no loss of load capacity. This is where the inspection report can clarify the work required.

The fact that a bridge is declared as structurally deficient does not imply that it is unsafe. A structurally deficient bridge typically needs maintenance and repair and eventual rehabilitation or replacement to address deficiencies. To remain open to traffic, a structurally deficient bridge is often posted with reduced weight limits that restrict the gross weight of vehicles using the bridge. If unsafe conditions are identified during a physical inspection, the structure will be closed.

Based on the latest Inventory Report, there are 597,443 bridges on public roads of which 73,800 or 12.4 percent are classified as structurally deficient. Another 80,322 or 13.4 percent are classified as functionally obsolete. National legislation requires all states to use fully trained engineer inspectors to evaluate all these bridges and determine their safety for the traveling public. Structurally deficient is, therefore, a bridge term implying that significant work needs to be done but, as long as traffic is permitted to use the bridge, the bridge is deemed SAFE.

More information on the National Bridge Inspection Standards is available at www.fhwa.dot.gov/bridge/nbis.htm.

Sustainability Considerations in Bridge Design, Construction, and Maintenance

by M. Myint Lwin

The roadside sign shows what "Green Highways" is all about.

WHAT IS SUSTAINABILITY?

The World Commission on Environment and Development, in their Report on Our Common Future (1987), defines sustainability as development that meets the needs of the present without compromising the ability of future generations to meet their own needs. This implies that the development of highway projects, including pavements and bridges, must consider the rights of future generations to raw materials and ecological support systems, such as the climatic, agriculture, economic, and cultural systems. When designing, building, and maintaining a safe, durable, and efficient highway system, we need to work together to coordinate and integrate environmental protection and enhancement activities in the decision making process. We need to consider recycling of old pavements and bridges, involving the communities in the selection of the best environmentally sensitive designs, protecting watersheds and natural habitats during construction, and conserving resources in the operation and maintenance of the facilities.

The FHWA Initiatives

In 2002, the Federal Highway Administration (FHWA) designated environmental stewardship and streamlining as one of its three "vital few goals," along with safety and congestion mitigation. Subsequently, FHWA made substantial investments in improving the quality and efficiency of environmental decision-making through initiatives such as context sensitive solutions, the Eco-Logical approach, the Exemplary Ecosystem Initiatives program, the recently announced Human Environment Initiatives program, and efforts to link planning and the environment. Visit the FHWA website at www.fhwa.dot.gov/csd/index.cfm for more information on these and other initiatives.

Context sensitive solution is a collaborative, interdisciplinary approach that involves stakeholders in developing transportation facilities that complement their physical settings and preserve scenic, aesthetic, historic, and environmental resources while maintaining safety and mobility.

Through the Exemplary Ecosystem Initiatives program, FHWA recognizes best practices in environmental stewardship demonstrated at the state level. Since 2002, FHWA has highlighted more than 20 innovative and forward-thinking initiatives that employ ecosystem-based approaches.

FHWA has hosted more than 20 workshops across the country to promote the linkages between planning and the National Environmental Policy Act. Also, a planning work group, chaired by FHWA and established as part of Executive Order 13274, Environmental Stewardship and Transportation Infrastructure Project Reviews, aims to advance integrated planning by bringing together the necessary agencies and stakeholders early on.

To promote ecosystem approaches to transportation development, FHWA championed a multiagency effort to develop a nonprescriptive approach to making infrastructure more sensitive to wildlife and ecosystems through greater agency cooperative conservation. The effort culminated in May 2006 with release of the publication *Eco-Logical: An Ecosystem Approach to Developing Infrastructure Projects* (FHWA-HEP-06-011).

SAFETEA-LU Section 1805 Use of Debris from Demolished Bridges and Overpasses stipulates that any state that demolishes a bridge or an overpass that is eligible for federal assistance under the highway bridge replacement and rehabilitation program under Section 144 of Title 23, United States Code, is directed to first make the debris from the demolition of such bridge or overpass available for beneficial use by a federal, state, or local government, unless such use obstructs navigation. The term "beneficial use" means the application of the debris for purposes of shore erosion control or stabilization, ecosystem restoration, and marine habitat creation.

Green Highways

A new multidisciplinary partnership brings together the diverse initiatives and activities that contribute to the "greening" of U.S. highways. The Green Highways Partnership (Green Highways) is a voluntary, collaborative effort aimed at fostering partnerships to improve upon natural, built, social, and environmental conditions, while addressing the functional requirements of transportation infrastructure. Green Highways provides state departments of transportation (DOTs) with the opportunity to highlight the many good environmental practices already underway and encourages additional innovations.

FHWA is one of many partners that include federal and state transportation and regulatory agencies, contractors, industry groups, trade associations, academic institutions, and nongovernmental organizations focused on highways and resource management issues. The partnership engages practitioners who represent an array of disciplines, including engineering, environment, law, safety, operations, maintenance, and real estate.

Green Highways grew out of efforts by the U.S. Environmental Protection Agency's (EPA) Region 3, which consists of the mid-Atlantic States of Delaware, Maryland, Pennsylvania, Virginia, and West Virginia and the District of Columbia. "The goal is to achieve transportation and environmental objectives so that both are 'better than before,'" says Hal Kassoff, Senior Vice President at Parsons Brinckerhoff Inc., a consultant involved in the initiative.

Through a combination of networking events and opportunities, public-private partnerships, and a new website clearinghouse (www.greenhighways.org), Green Highways proponents are pushing the boundaries of traditional highway building practices. "Whether one represents industry or government agency, everyone involved welcomes the opportunity to advance to a more sustainable country and world," says Robb Jolly, Senior Vice President of Market Development for the American Concrete Pavement Association (ACPA).

Green Bridges

The concepts of "Green Bridges" should logically follow the approaches, efforts, and partnerships established for "Green Highways." In "Green Bridges," the design, construction, and maintenance practices should give full consideration to at least the following areas:

- Attention to safety, durability, mobility, and efficiency;
- Compliance with environmental and preservation laws and regulations;
- Application of context sensitive solutions;
- Sustainable site selection and planning;
- Utilization of high performance materials and quality workmanship;
- Safeguarding air and water quality and efficiency;
- Conservation of materials and resources; and
- Avoidance of negative impacts on the ecosystems.

A good example of a "Green Bridge" is the Green Bridge Project in Brisbane, Australia. It is Australia's first pedestrian, bicycle, and bus bridge. The bridge, now known as the Eleanor Schonell Bridge, is a cable-stayed structure with a 390-m (1280-ft) -long main span, and connects the University of Queenland's St. Lucia campus and Dutton Park (www.brisbane.qld.gov.au and search for "Eleanor Schonell"). The community was involved in the design of the Green Bridge. It has several environmental and cultural features included in the design:

- Bio-retention ponds that collect and filter water runoff from the bridge deck;
- Interactive touch screens featuring bridge information;
- A solar roof at the Dutton Park that is used to power digital signage and lighting on the bridge; and
- Poetry by local writers is permanently etched into the railings and concrete of the pedestrian walkway.

The safety and mobility related benefits of this pedestrian, bicycle, and bus bridge are:

- Improved access to the university campus;
- Enhanced public transportation services;
- Encouragement of walking, bicycling, and other modes of green transportation;
- Reduced congestion on local streets; and
- Reduced traffic going through the city.

Education in Sustainability

At the 2007 PCI Convention and National Bridge Conference, Emily Lorenz, Editor-in-Chief of the *PCI Journal*, conducted an educational seminar on sustainability. The seminar provided an overview of sustainability and explained the importance to those who work in the construction industry.

In their 2007 Design Awards Program, PCI established a new award category: Best Sustainable Design. This award helps to heighten the awareness of the significance of sustainability and promotes the use of "Green Bridges" principles in the design of bridges. The inaugural award went to the 5th Street Pedestrian Plaza Bridge, owned jointly by the Georgia Department of Transportation and the Georgia Institute of Technology. The bridge deck included high planter walls that not only help to control noise and limit visibility of the traffic below but also serve as landscaping areas. (See page 22.)

PCI Sustainability Award
The new Fifth Street Bridge crosses I-75/I-85 in Midtown, Atlanta. Photo: ARCADIS U.S. Inc.

Closing Remarks

Sustainability is about cleaner air and water, greener earth, and healthier living for the present and future generations. Let's continue to design sustainable concrete bridges!

In the next few editions of *ASPIRE*™ we will continue to discuss the social, economic, and ecological benefits of sustainable concrete bridges. The author invites readers to share ideas and suggestions, facts and figures, case studies, etc. on these topics by writing to him at myint.lwin@dot.gov.

Eleanor Schonell Bridge project, Brisbane, Australia. Photo: Rae Allen.

U.S. Department of Transportation
Federal Highway Administration

Virginia's

Developments in the Use of Concrete in Bridges

by H. Celik Ozyildirim, Virginia Transportation Research Council and Julius F. J. Völgyi Jr., Virginia Department of Transportation

The use of HPC in the Richlands Bridge allowed the number of beams per span to be reduced from seven to five. All photos VDOT unless specified otherwise.

In the mid 1990s, the Virginia Department of Transportation (VDOT), in cooperation with the Federal Highway Administration (FHWA), initiated a program focused on the development and implementation of high performance concrete (HPC). Prior to that time, many improvements had been made in design, materials, and construction practices in VDOT, establishing the foundation for the HPC program. Initially, the HPC program entailed work with normal weight concretes and focused on mix designs that yielded high strength, low permeability, and temperature control. Efforts progressed to the development of mix designs using lightweight aggregate to produce lightweight HPC with high strength and low permeability. VDOT has also evaluated the use of self-consolidating concrete. This concrete has very high flow characteristics, enabling consolidation without mechanical vibration. Finally, HPC efforts have led VDOT to investigate ultra-HPC fiber-reinforced concrete in bulb-tee beams with no conventional steel shear reinforcement, very high compressive strength, and negligible permeability.

High Performance Concrete

Since 1992, Virginia has been requiring protection against alkali-silica reactivity (ASR). If the alkali content of cements is currently more than 0.45 percent, various combinations of slag or pozzolans are required by VDOT to inhibit ASR. The addition of pozzolans or slag leads to low permeability in concretes and protection against chemical attack.

In the mid 1990s, in cooperation with the FHWA, new bridge projects were planned under the experimental HPC program. These bridges had high strength concrete beams and/or a concrete permeability requirement. The first HPC construction project was completed in 1995. This structure carrying Route 40 over Falling River, in Campbell County, consists of four 80-ft-long spans with AASHTO Type IV beams. The beams were fabricated with HPC with a specified compressive strength of 8000 psi and a maximum chloride permeability of 1500 coulombs. The bridge deck was constructed using HPC with a specified compressive strength of 6000 psi and a maximum chloride permeability of 2500 coulombs. The HPC design resulted in a reduction in the number of beams per span from seven to five.

Soon after, another HPC structure was constructed carrying Virginia Avenue over the Clinch River in Richlands with beams having 0.6-in.-diameter prestressing strands. The bridge consists of two 74-ft-long spans of AASHTO Type III beams. The specified concrete compressive strength was 10,000 psi at 28 days and the maximum chloride permeability was 1500 coulombs. The deck was constructed with HPC having a specified strength of 5000 psi and a maximum chloride permeability of 2500 coulombs. Again, the use of HPC resulted in reducing the number of beams per span from seven to five.

By 1999, VDOT had 76 bridge structures in the HPC program. The specified strength of the concrete ranged from 7000 to 10,000 psi. The low-permeability requirements were a maximum of 1500 coulombs for the prestressed concrete girders, 2500 for the cast-in-place concrete decks, and 3500 for cast-in-place concrete in the substructures.

Lightweight HPC

The economic benefits of HPC combined with a reduction in dead load make lightweight HPC (LWHPC) a very attractive material choice. In bridge beams, the use of LWHPC results in reduced dead loads that enable longer span lengths and reduced substructure loads. Bridge deck replacement using LWHPC reduces dead load thereby allowing greater lane capacity. The high quality concrete is expected to extend the service life of the structure.

The first LWHPC bridge was constructed in 2001. The bridge carried Route 106 over the Chickahominy River near Richmond, Virginia. It was constructed using 84-ft-long AASHTO Type IV beams fabricated with LWHPC with a minimum specified compressive strength of 8000 psi and a maximum chloride permeability of

The Route 106 Bridge over the Chickahominy River was the first use of lightweight high performance concrete.

1500 coulombs. The LWHPC deck had a specified strength of 4000 psi and a maximum chloride permeability of 2500 coulombs.

Two very long structures that carry Route 33 over the Mattaponi River (total length 3454 ft) and Pamunkey River (total length 5354 ft) near West Point were recently completed. For both bridges, the specified concrete strength for the beams was 8000 psi and maximum chloride permeability was 1500 coulombs. The deck on the LWHPC beams used a LWHPC, with a specified strength of 5000 psi and a maximum chloride permeability of 2500 coulombs. The mass concrete used in the footings and bent caps had 40 percent fly ash to control the temperature rise.

Self-Consolidating Concrete

In 2001, VDOT used self-consolidating concrete (SCC) in an arch bridge carrying traffic over a creek on the Stafford Lakes Village Parkway, near Fredericksburg. A total of 25 precast arch segments were placed side-by-side to create a single 30-ft span across the creek. In 2005, VDOT placed 40 beams with SCC in the Route 33 bridge over Pamunkey. Bulb-tee beams were fabricated using SCC with a specified strength of 8000 psi and a maximum chloride permeability of 1500 coulombs. Before casting the actual bridge beams, test beams were fabricated and loaded to failure to ensure that the specified properties were obtained and the bond between the steel and concrete was satisfactory. Recently, VDOT used SCC for 24 to 48-in.-diameter drill shafts on the Route 28 over Broad Run project in Manassas. The shafts range in length from 18 to 28 ft with a specified concrete strength of 4000 psi to provide

Self-consolidating concrete was used in the drilled shafts of the Route 28 Bridge over Broad Run.

a minimum capacity of 200 tons per shaft. VDOT is currently studying the performance of SCC in bulb-tee beams and the substructure with plans to construct a bridge through the Innovative Bridge Research and Construction (IBRC) program. VDOT is extending SCC to lightweight concrete in beams. A bridge project has been selected, a test beam has already been evaluated, and another one planned.

Bulb Tees and Spliced Beams

Until 2001, Virginia used AASHTO/PCI prestressed concrete beams Types II through VI although the Types III and IV were the mainstay. Virginia developed its prestressed concrete bulb-tee sections through the Precast Concrete Economic Fabrication (PCEF) Committee with depths ranging from 29 to 93 in. in 8-in. multiples and a web width of 7 in. to accommodate the harping of two rows of strands. The sections were modeled after the New England bulb-tee. Virginia uses specified concrete strengths of 5000 to 10,000 psi.

The first spliced beams were utilized on Route 123 over the Occoquan River project, which has a total bridge length of 1181 ft and a width of 123 ft 6 in. Bulb-tee sections, 77 in. deep were used for the four 144 ft units. Post-tensioned spliced members with section depths varying

The first spliced beams were used on Route 123 Bridge over the Occoquan River.

from 79 to 150 in. were used for the 180-, 240-, and 180-ft span lengths. Specified concrete strength was 8000 psi. The last phase of this project was opened to traffic in August 2006. The next two projects, completed in 2006 and 2007, with spliced bulb-tee sections were on Route 33 over the Pamunkey and Mattaponi Rivers. On both projects, spliced girders with depths ranging from 96 to 126 in. were used to form two units with span lengths of 200, 240, 240, and 200 ft. Lightweight concrete with an 8000 psi specified compressive strength and 6000 psi release strength was used.

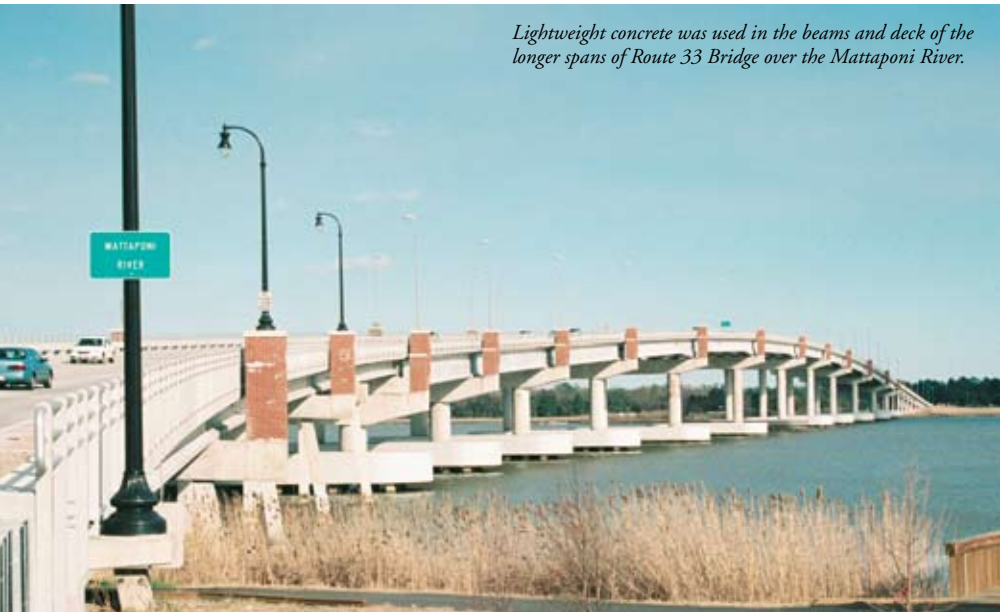

Lightweight concrete was used in the beams and deck of the longer spans of Route 33 Bridge over the Mattaponi River.

Spliced girders with lightweight concrete were used on the Route 33 Bridge over Pamunkey River.

Ultra-High Performance Fiber-Reinforced Concrete

Ultra-high performance, fiber-reinforced concrete (UHPFRC) has compressive strengths reaching 30,000 psi with flexural strengths above 7000 psi. UHPFRC is virtually impermeable to liquids. Two of the primary sources of these enhancements are the use of finely graded and tightly packed ingredients with no coarse aggregate and the use of steel or synthetic fibers. UHPFRC is ideal for use in bridge construction, enabling lighter, thinner, and more durable applications. The fibers in UHPFRC provide tensile capacity across cracks, resulting in high shear capacity in flexural members. Typically, reinforcement for shear is not required. One of the 10 spans of the bridge over the Cat Point Creek in Richmond County, now under construction will contain UHPFRC. The 45-in.-deep prestressed concrete bulb tees are 81 ft 6 in. in length. Special provisions were developed for the UHPFRC for a specified compressive strength of 23,000 psi and 12,000 psi required at release of the strands.

Overlays

Latex-modified concrete (LMC) has been successfully used in overlays since 1969 to resist the intrusion of chlorides. LMC provides low permeability. In the 1980s, silica fume (SF) was introduced for low permeability and high strength concrete. Evaluation of SF indicated that it was a viable alternative to LMC, and, in 1987, the first silica fume overlay was placed on a bridge deck. Both the LMC and SF concretes in overlays are limited to a maximum water-cementitious materials ratio of 0.40. Recently, very early strength LMC has been introduced. These overlays can be opened to traffic after three hours of curing, thereby reducing traffic congestion. Additionally, slag and fly ash alone or in combination with silica fume are also permitted in overlays if low permeability values are achieved. Another effort with overlays has been the introduction of porous aggregate soaked with deicers for winter maintenance.

Aesthetics

No one wants to look at "ugly" bridges. While every bridge cannot necessarily be a "signature" bridge, there are many ways to enhance the visual appearance of a bridge structure. While the Route 60 over Pretty Creek project in Norfolk with five 68-ft-long prestressed concrete AASHTO Type III beams was a routine structure, enhancements were made to improve the appearance of the structure. The beams were "hidden" by an exterior arched reinforced concrete beam with an orange color with architectural dentils across the top to provide continuity as the channel span could only allow a straight section to provide channel clearance. The arching effect was continued through the retaining walls in which brick pavers were used on the face to match the salmon pink brick pavers used in the sidewalks and raised median areas. The three-pipe aluminum rail was painted green. Various tones of sand-colored architectural cladding panels were attached to the exteriors of the piers while the interior of the piers was also arched.

Another bridge opened to traffic in October 2003 is the southbound Route 29 (South Main Street) over Dan River in the city of Danville. The overall bridge length is 821 ft. AASHTO Type III beams were used with four pairs of precast post-tensioned arch ribs 6 ft 0 in. wide by 3 ft 6 in. deep to form open spandrel arch spans. The bridge replicates the existing Luten open spandrel arch of the northbound structure, which was rehabilitated on the same contract.

Four pairs of precast post-tensioned arch ribs of the Dan River Bridge replicate the existing Luten spandrel arch.

Conclusions

Virginia's work with HPC in different applications has led to concretes that are more workable and have lower permeability than conventional concretes. These improvements are expected to provide longer service life, cost savings, reduction in construction time, and lower maintenance requirements. These concretes have a high potential for improved service; however, care needs to be exercised in their production to ensure that these benefits can be achieved. More work in this area will ensure the realization of the full potential of these concretes.

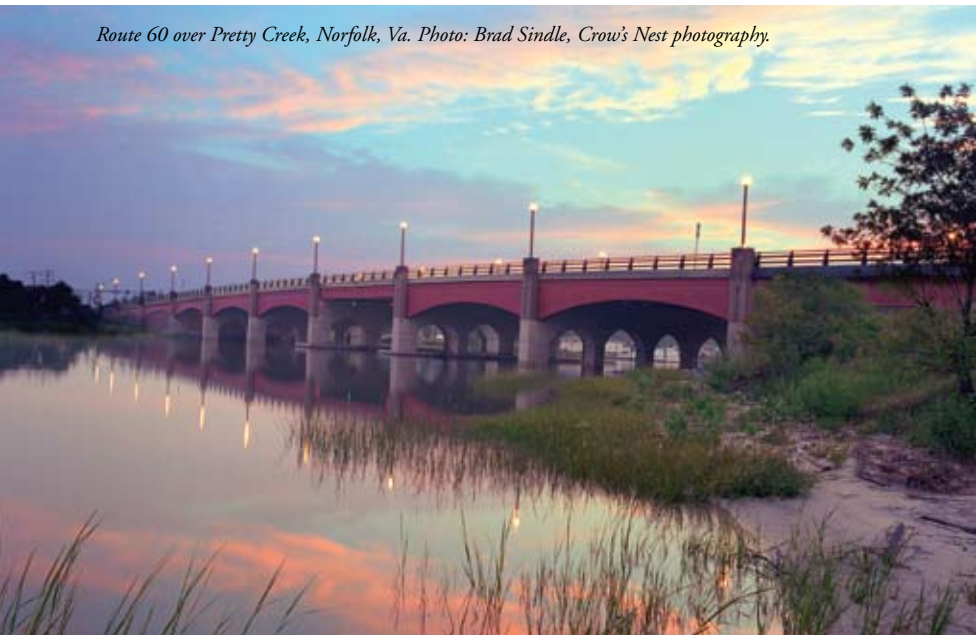

Route 60 over Pretty Creek, Norfolk, Va. Photo: Brad Sindle, Crow's Nest photography.

H. Celik Ozyildirim is Principal Research Scientist with the Virginia Transportation Research Council and Julius F. J. Völgyi Jr. is Assistant State Structure and Bridge Engineer with the Virginia Department of Transportation.

For more information on Virginia's bridges, visit www.virginiadot.org.

Concrete bridges are focus of new and replacement projects for all sizes of bridges

A culvert-replacement project over Lackamas Creek reused bridge slabs obtained from the City of Olympia, where they had been used for a temporary bridge.

Inventory, Six-Year Plan Guides Thurston County

by Dale Rancour, Thurston County, Washington

Maintaining bridges in Thurston County is a critical area of concentration, and that effort requires knowing the status of all of our 112 roadway bridges. To that end, county engineers in Washington State produce an annual written report of findings for the legislature, detailing the county's bridge inspection efforts. The Board of County Commissioners each year then adopts a 6-year plan for transportation improvements based on these reports.

Each bridge receives an intermediate inspection every 2 years and an in-depth inspection every 5 years. We also inspect and rate each bridge at a minimum frequency between the 2-year inspections, with some bridges being inspected more frequently. The more frequent inspections and evaluations are done for aging bridges or those that need more attention due to their history or environmental exposure.

This approach has served the citizens of Thurston County well, because maintenance needs have been identified sufficiently early so that costs of repair have remained relatively economical. Also, the more timely inspection program is thought to be one of the major reasons that bridges in need have been identified as early candidates for the bridge replacement program.

Eighty-nine of our bridges were built with concrete components, most using precast concrete girders. The county also has 11 steel bridges, six timber bridges, and six culverts that are classified as bridges.

Most bridge construction, whether for new locations or replacement structures, are made of concrete. The reason for that is simple: in our Pacific Northwest climate, everything else rusts or rots, causing higher maintenance costs. In addition, the county contains many waterways that serve as salmon spawning grounds or sensitive wetlands. These areas require one-span structures to avoid disrupting the waterway, and concrete designs have proven very effective in these situations.

We expect this approach will increase in coming years, as we are finding ourselves in the position of providing new bridges in our county without actually building any new waterway crossings. We are currently replacing many old and deteriorated culverts. Many of these consist of 2- or 3-ft-diameter corrugated steel pipes. Because of the spawning grounds and other fish and wildlife regulations, these culverts are being expanded as they are replaced.

As a result, roadways that previously had culverts now have bridges. Unfortunately, these replacements are not eligible for federal bridge replacement funds because they were not previously classified as bridges. Their future replacement, however, will be eligible for funding because they are now considered as bridges. Thus, we will be adding new bridges to our inventory for many years to come.

Dale Rancour is County Engineer, Thurston County, Washington.

Sustainability

One type of bridge project we have been doing more often involves reusing precast concrete bridge slabs. This approach speeds construction and reduces costs significantly, while creating a durable design that will need little maintenance during its life.

An example is the culvert replacement project at Lackamas Creek in 2006. The plan consisted of removing existing culverts and constructing a single-span concrete bridge approximately 29 ft long and 39 ft wide using bridge slabs. The slabs were acquired from the City of Olympia, where they had been used for a temporary detour bridge for the 4th Avenue Bridge project. The slabs were removed from the temporary bridges, shipped to the new bridge site, and re-erected.

Additional bridges were constructed using recycled bridge slabs to replace failing culverts this past summer. These included bridges over Allen Creek along the Case Road Extension and over a creek along 128th Street. More replacements are planned for 2008.

Old Highway Bridge No. O-9, originally built in 1923, was replaced in 2007 with a 110-ft-long, 42-ft-wide precast, prestressed concrete bridge.

EDITOR'S NOTE

If your county has a high percentage of concrete bridges or some interesting and innovative concrete bridges and would like to be featured in ASPIRE,™ please let us know at info@aspirebridge.org.

High Performance, Sustainable Concrete Bridges using Coal Combustion Products

Coal combustion products (CCPs) are materials created when coal is burned to generate electricity. They include fly ash, flue gas desulfurization materials, bottom ash, and boiler slag. Leaders are discovering that bridges constructed with fly ash concrete and other CCP applications offer extraordinary technical, commercial, and sustainable advantages.

California's largest-ever bridge project, the San Francisco-Oakland Bay Bridge as shown on page 11, is utilizing high performance, high-volume fly ash concrete. With innovative specifications and blending techniques, Caltrans achieved desirable workability, hardening, and permeability properties. "The reformulated cement concrete will help make the bridge stronger, last longer, and reduce greenhouse gas emissions," said Governor Arnold Schwarzenegger.

Last year the United States produced 124 million tons of CCPs. About 43 percent were used beneficially, while tens of millions of tons were landfilled. Using CCPs conserves natural resources by eliminating the need to mine virgin materials. Substituting about one ton of fly ash for a ton of portland cement eliminates a ton of CO_2. Also, land becomes available for uses other than CCP disposal.

Fly ash and cenospheres are CCPs often specified for high performance concrete in bridge decks, piers, and footings. The recently completed $531-million Arthur Ravenel Jr. Bridge project in Charleston, S.C. used more than 30,000 tons of fly ash.

For more information, please contact ACAA, the leading industry association promoting and advancing coal combustion products at (720) 870-7897; info@acaa-usa.org; or visit www.acaa-usa.org. Our members represent 90 percent of America's coal combustion products industry. We can put you in touch with resources and experts to help achieve and exceed performance expectations on your next bridge project.

2008 Interim Changes Part 1

by Dr. Dennis R. Mertz

At their 2007 annual meeting in Wilmington, Delaware, the AASHTO Subcommittee on Bridges and Structures (SCOBS) considered and adopted six agenda items related to concrete structures. Technical Committee T-10, Concrete Design, developed Agenda Items 32 through 37 over the past several years and moved them to the subcommittee ballot this year. The agenda items represent revisions and additions to the AASHTO *LRFD Bridge Design Specifications* or the AASHTO *LRFD Bridge Construction Specifications*. These agenda items along with the complete agenda for the recent SCOBS meeting are available at http://bridges.transportation.org/?siteid=34&pageid=27. The 2007 concrete structures agenda items will become the 2008 interim changes. Agenda Items 32 through 34 are reviewed in this article.

Agenda Item 32 adds a new article and revises existing articles of the *LRFD Bridge Construction Specifications* allowing the use of low-carbon, chromium steel reinforcing bars. In 2004, ASTM published A 1035/A 1035M, *Standard Specification for Deformed and Plain, Low-carbon, Chromium Steel Bars for Concrete Reinforcement*. This reinforcement offers the potential for enhanced corrosion resistance and is suitable for use in bridge structures. Article 9.2.4 was added allowing the use of these bars through a reference to the ASTM designation. A revision to Article 9.7.3 prohibits welded splices for these bars. Article 5.11.5.2.3 of the *LRFD Bridge Design Specifications* currently prohibits the use of welded splices in bridge decks, thus this revision.

Revisions to Article 5.10.10.1 of the *LRFD Bridge Design Specifications* and its commentary comprise Agenda Item 33 and relate to the requirements for reinforcement near the ends of pretensioned beams. The terminology is changed to reflect practice. The current term "bursting" is changed to "splitting" because "splitting" is generally used for pretensioned members as considered in this article, whereas "bursting" is a term used more frequently for post-tensioned members. The existing specification wording defines reinforcement requirements for pretensioned members with vertical webs. However, splitting reinforcement is required in other pretensioned members such as precast slabs, multi-stemmed beams, U-beams, and box girders, where the primary splitting reinforcement may not be vertical. The additions to Article 5.10.10.1 and its commentary clarify the application of these requirements to members without vertical webs.

A new general procedure to allow the direct calculation of β and θ in shear strength calculation is introduced.

Agenda Item 34 is a product of National Cooperative Highway Research Program (NCHRP) Project 12-61, *Simplified Shear Design of Structural Concrete Members*. The results of this study are presented in NCHRP Report 549 of the same name, which can be viewed and downloaded at http://trb.org/news/blurb_detail.asp?id=5799. This research has already spawned the addition of another acceptable shear-resistance model to the *LRFD Bridge Design Specifications* last year in the form of 2006 Agenda Item 10 discussed in the Summer 2007 edition of *ASPIRE.*™

This agenda item introduces a new general procedure utilizing equations that allow the direct solution of β, the factor indicating the ability of diagonally cracked concrete to transmit tension and shear, and θ, the angle of inclination of diagonal compressive stresses. These equations are derived from the modified compression field theory (MCFT) of existing Article 5.8.3.4.2. Similar direct-solution equations are included in the shear-design provisions of the Canadian Standards Association (CSA) A23.3-04, *Design of Concrete Structures*. A further change is to make the design process noniterative by assuming that θ is equal to 30° for evaluating the demands of shear on longitudinal reinforcement. This simplification was also made in CSA A23.3-04. As a part of this agenda item, the existing methods for calculating shear resistance including Tables 5.8.3.4.2-1 and 5.8.3.4.2-2, will be retained as Appendix B to Section 5.

The additions and revisions represented by Agenda Items 35 through 37 will be reviewed and discussed in a future article.

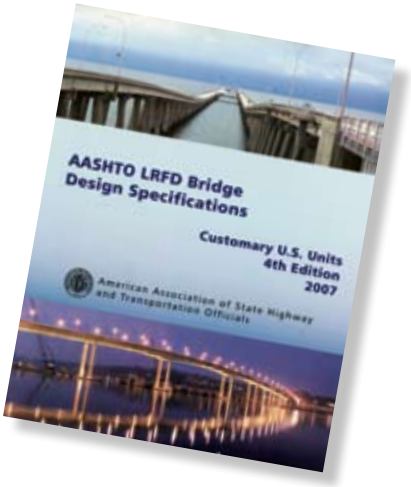

A Passion for Engineering

Eriksson Technologies was founded in 1998 with a singular objective: the passionate pursuit of technical excellence. This philosophy is evident in every aspect of our company, from our highly acclaimed technical support down to the smallest technical details of our software. It's what has made us the preferred provider of engineering software to many DOTs, consulting engineers, precast fabricators, and universities nationwide.

Software

First and foremost, Eriksson Technologies is a software company. We design and develop engineering application software to meet the needs of professional bridge engineers.

Our first product, PSBeam™, set a new standard for performance and technical excellence. Now, we've raised the bar again. Developed in the .NET Framework, ParaBridge™ will change the way you design bridges. Integrated, 3D design will become the new engineering paradigm.

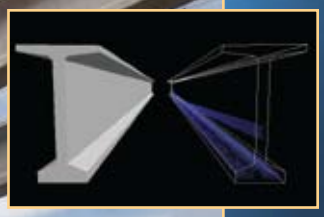

Research

Eriksson understands bridge engineering. We stay abreast of proposed specifications changes and new design methodologies through our active involvement in industry committees and our participation in cutting-edge research.

Our typical role on a research team is to serve as the vital link between pure research and engineering practice, which gives us special insight into the behavior of bridges. Better understanding of the underlying theory gives us a strategic edge in developing better modeling tools.

Training

Through our technical seminars, we have trained hundreds of practicing engineers to successfully make the transition to LRFD and helped them stay current with yearly changes in the specifications.

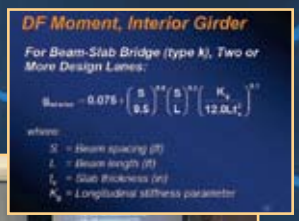

In addition to our own highly qualified staff, we tap industry experts to create and deliver a training experience that is second to none.

Theory and application are combined to provide a highly effective vehicle for transferring technology to our most important asset: our clients.

LRFD.com

Eriksson technologies

The beams in Span 2 have not yet deflected into their final position.

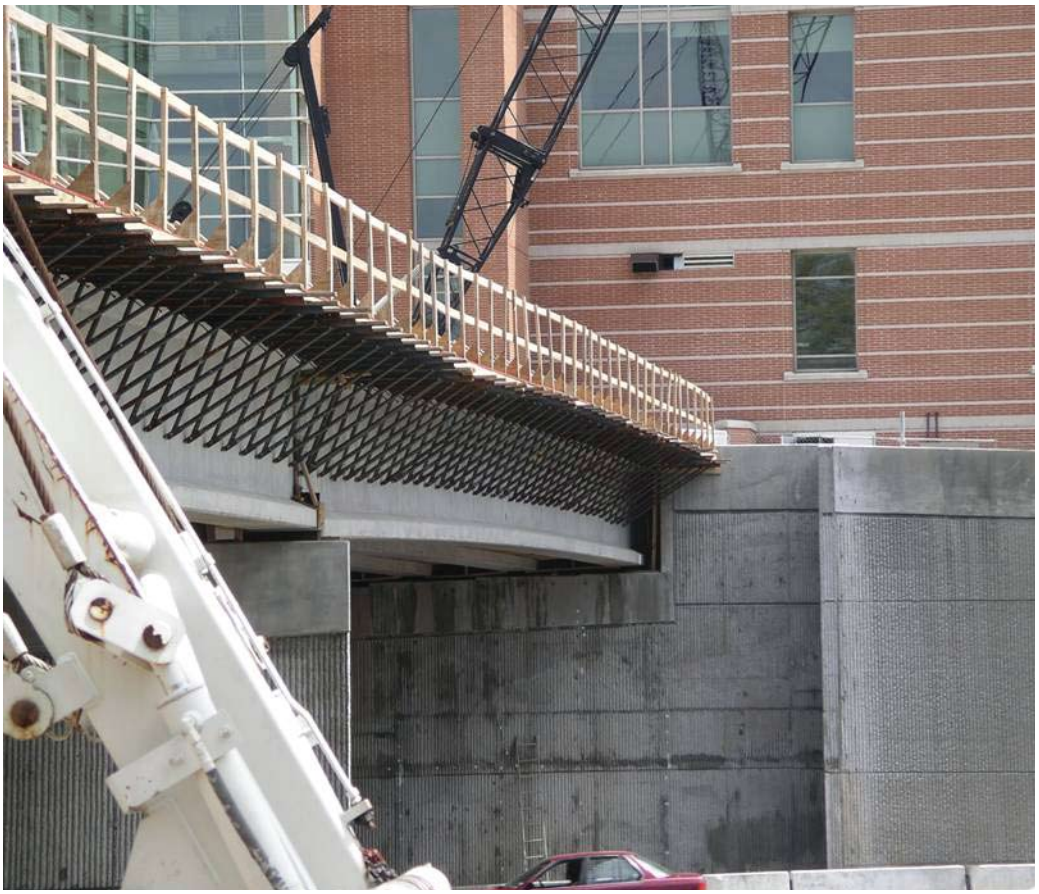

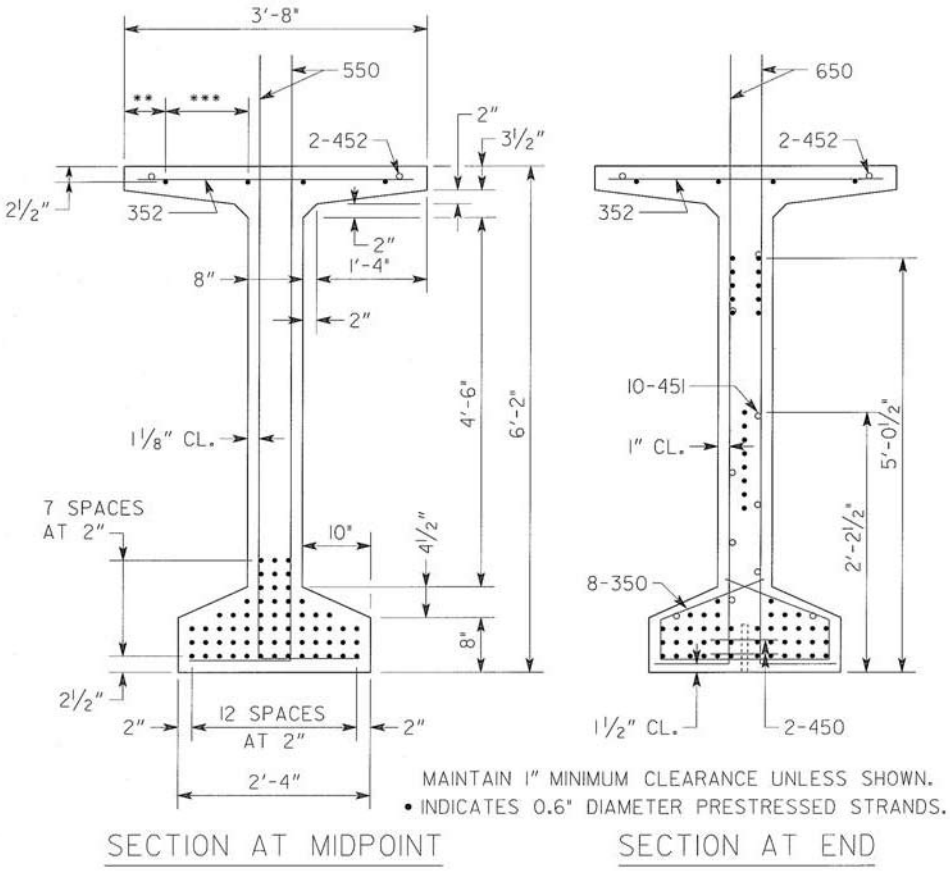

A bulb-tee cross section was modified to allow an extra line of strands in the web.

A new tieback retaining wall was needed at one end. Photo: Hayward Baker

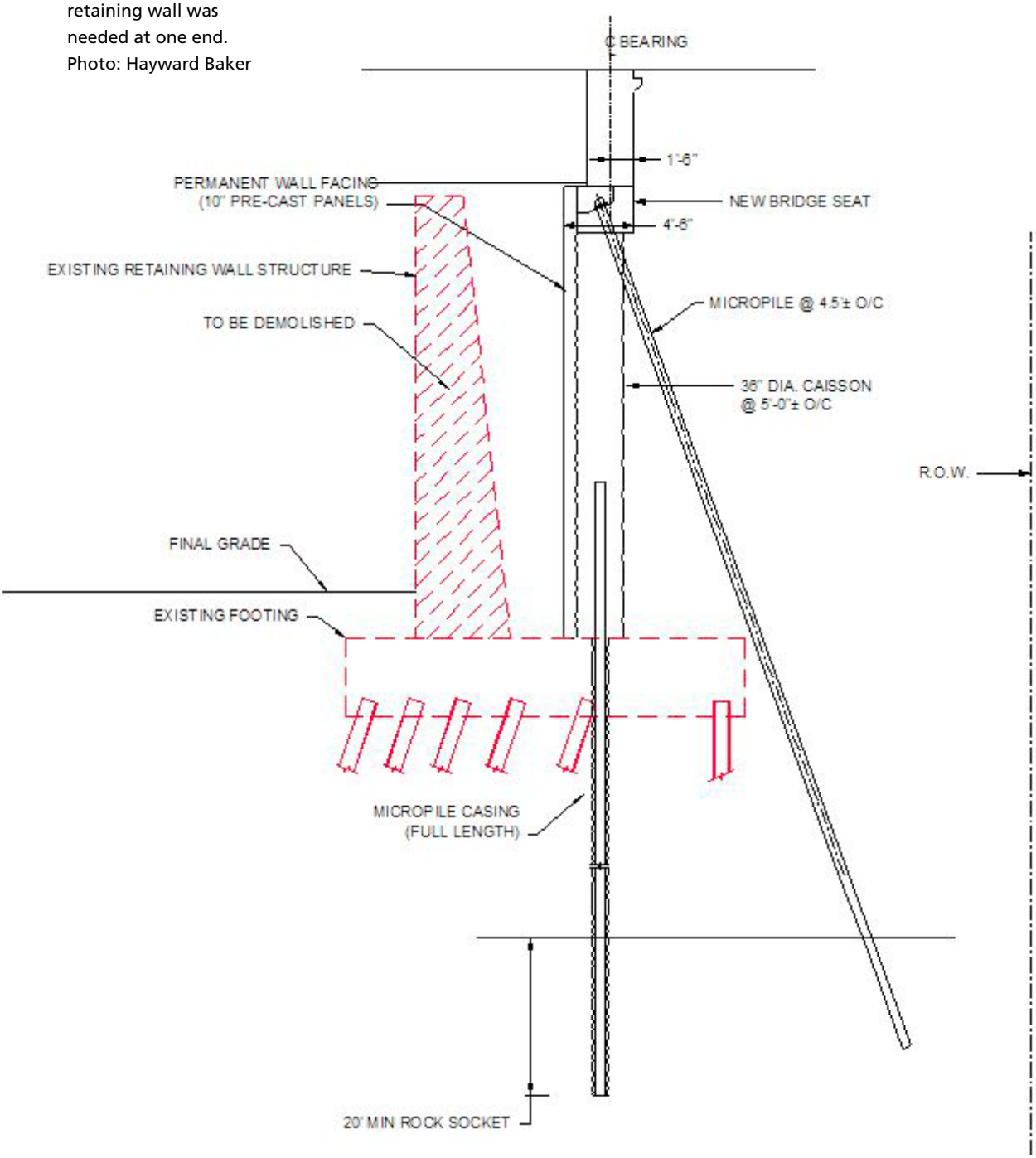

Specially designed counterforts were used to support the 9-ft-high precast planter walls. Main Photo: GDOT

Inset Photo: Planter walls and trellis on the south side of the bridge. Photo: ARCADOS U.S. Inc.

Steel diaphragms were used to provide quick installation and lateral support to the beams.

The preferred alternative consisted of a three-span, field-spliced, precast, prestressed concrete bulb-tee girder bridge.

Cranes on the pier segments were used to erect the drop-in segments. Photos: Port of Stockton

Temporary supports were provided at the bent caps to support the pier segment. Photos: Con-Fab.

The designers' bridge model shows the design for the completed Devil's Slide tunnel project. The bridges connect existing Route 1 to the North Portals of the tunnels by passing over the environmentally sensitive coastal wetlands in the valley below.

This project's success bodes well for the continuation of this approach for more California bridges.

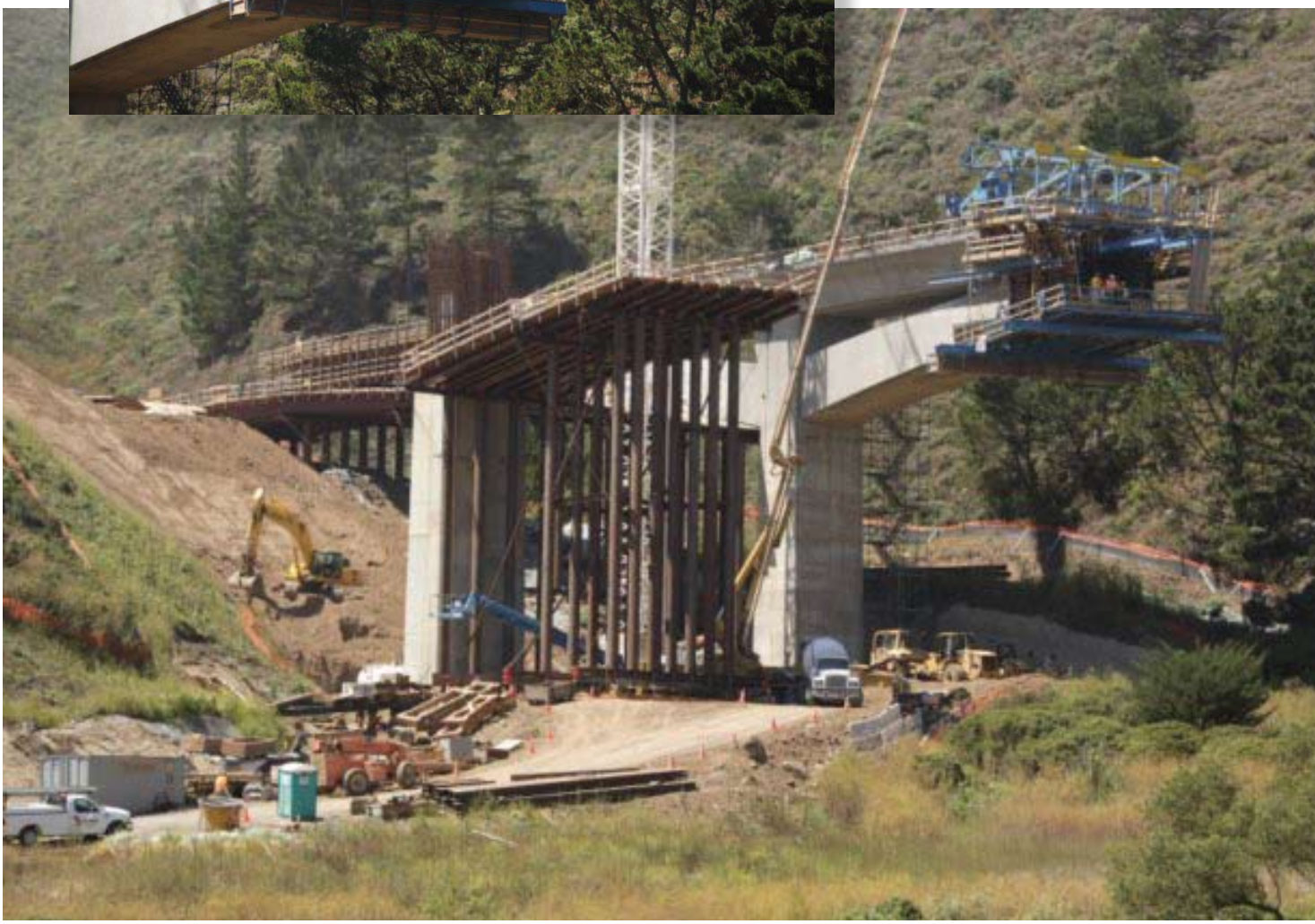

Aesthetics were given top priority on every element of the bridge. Within the pier tables, the superstructure bifurcates vertically into two distinct elements, with an upper box girder and a lower box-girder strut element that give the bridges a graceful, shallow arched appearance.