Inspection and Repair of a Fire Damaged Prestressed Girder Bridge

RICHARD STODDARD, Washington State DOT, Olympia, WA

IBC-04-17

Section 1 Incident Response

DAMAGE INSPECTION REPORT 12/12/02

On December 11, 2002, at approximately 4:00 pm, a railroad tanker collision caused a fire under a prestressed girder bridge that consumed 30,000 gallons of mythanol, (photo 1). This section of the bridge was a relatively new continuous three span frame constructed in 1997. The girders had a span length of 146 feet, a 28 day concrete strength of 7000 psi, and 0.5" diameter 270 ksi steel strands. The bridge deck and columns were constructed using 5000 psi concrete and 60 ksi mild steel. Confinement reinforcement in the columns was provided by tightly wound spiral cages.

Photo 1. Puyallup River Bridge Railroad Tanker Fire

The fire engulfed Span 8 and maintained a high flame temperature for approximately one hour. The interstate freeway was immediately closed to traffic and remained closed pending an all night structural inspection.. The bridge displayed no unusual deflections or mis-alignments and was reopened to commuter traffic and legal weight trucks on the morning of December 12th. Over weight trucks were prohibited and routed to I-5.

Fire Damage:

The south face of the both columns at Pier 9 had 2 inch deep concrete spalls that exposed spiral reinforcement for the full height of the pier. Additional concrete was easily removed by hammering at the edges of the spalls. The spiral reinforcement and concrete inside the spiral appeared to be hard but sounded like delaminated concrete. Further analysis showed delaminations had formed within the concrete core just inside of the spiral cage and vertical reinforcement.

The crossbeam at Pier 9 had several areas of concrete spalling to depths of 0.5 but no reinforcement was exposed.

All 15 lines of girders in Span 8 were damaged by the fire. The color of the bottom flange soffit was a whitish-gray, (photo 2). The whitish-gray concrete at the corners of the bottom flange could be easily removed to expose the outermost prestressing strands for a length of more than 94 feet, (photo 3). There were 0.5 inch deep concrete spalls in the top flange and webs of girders.

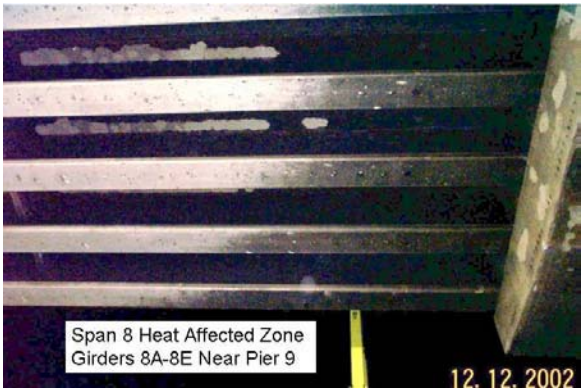

Photo 2. Span 8 Heat Damaged Flanges

The load capacity of the girders was investigated by visually checking for excessive deflections or obvious changes in camber. Spans 7, 8, and 9 showed no change in vertical or horizontal alignment.

The soffit of the concrete deck escaped damage and displayed no evidence of concrete spalling. The exterior faces of the bridge railing also escaped obvious damage from the fire.

Photo 3. Girder 8E Flange Soffit

Pipe hangers supporting a suspended 12 inch diameter storm drain pipe between Girders 8G and 8H had several failed attachments to the deck. Additionally, the elastomeric pads at the ends of the horizontal struts that rest against the girder webs had been vaporize or had fallen out.

Structural Recommendations based on the Emergency Inspection:

- Maintain truck weight restrictions placed on the bridge on December 12, 2002.
- Remove the loose concrete that presents a safety hazard to BNSF and the public.
- Conduct detailed inspections to verify findings and document extent of damage.

Section 2 Heat and Energy

FUEL

The railroad tanker involved in this fire was loaded with 30,000 gallons of Methyl Alcohol, with a chemical formula of CH_3OH. Product information supplied by Pharmco Products Inc.[1] lists the following Fire Fighting Measures:

Fire/Explosive Properties: Flash Point: 52F (11C) Tag Closed Cup
Flammable limits in Air (% by Volume): 6% Methanol – 36% Methanol
NFPA Rating: Health 1, Fire 3, Reactivity 0
Extinguishing Media: Apply alcohol-type or all-purpose foam by manufacturer's recommended techniques for large fires. Use carbon dioxide or dry chemical media for small fires.
Special Fire Fighting Procedures: Use water spray to cool fire-exposed containers and structures; Use water spray to disperse vapors – re-ignition is possible; Use self-contained breathing apparatus and protective clothing.
Unusual Fire and Explosion Hazards:

- *Vapors may travel to source of ignition and flash back.*
- *Vapors may settle in low or confined spaces.*
- *May produce a floating fire hazard.*
- *Static ignition hazard can result from handling and use.*

ESTIMATED FLAME TEMPERATURE

The flame temperatures of the fire were estimated to be approximately 3000° F. This estimate was calculated with the use of an On-Line software program provided by Dr. Allan T. Kirkpatrick, a professor of Mechanical Engineering at Colorado State University, (Figure 1).

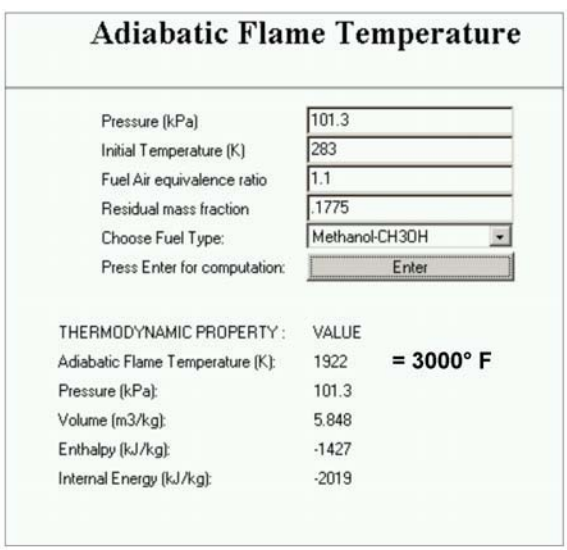

Figure 1 – Methanol Flame Temperature

"Adiabatic Flame Temperature"[4]: http://www.engr.colostate.edu/~allan/thermo/page12/adia_flame/Flamemain.html

ESTIMATED FIRE INTENSITY & HEAT ENERGY

Calculations were made to estimate the heat energy released by the methanol fire. A comparison of the intensity of this fire to ASTM E119 fire tests was helpful in determining the probable heat penetration and concrete damage within the girders. PCI publication MNL-124-77, *Design for Fire Resistance of Precast Prestressed Concrete*[2], provides the temperature and heat energy applied during the ASTM fire tests as well as graphs for establishing isotherms within concrete beams. Furnace temperatures for the ASTM fire test reach a maximum of 2300° F after eight (8) hours of exposure. It is likely that the methanol tanker fire projected temperatures of 2700° F to the bottom of the girders after only one-half (1/2) hour and temperatures fell below 1000° F after two (2) hours. Figure 2 compares the ATSM furnace temperatures to a possible heat time history for the methanol tanker fire. Differences can be seen in temperature and duration. The tanker fire was hotter but temperatures subsided more quickly than prescribed for the ASTM test.

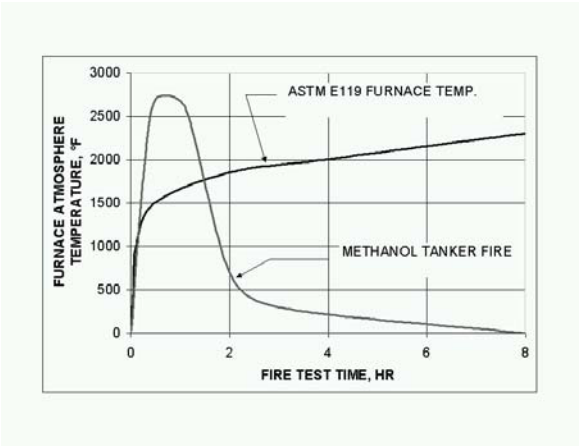

Figure 2. Temperature vs Time

The heat energy applied during the ASTM test is prescribed to be 8000 BTU per square foot per hour. The estimated energy released by the combustion of 30,000 gallons of Methanol was calculated to be approximately 1,600,000,000 BTU[5]. Reducing the total BTU to account for incomplete combustion and heat transfer, and then uniformly distributing the energy to the deck area of Span 8, indicates that the energy exposure may have been in the range of 25,000 BTU to 62,000 BTU per square foot per hour. This indicated that Span 8 was exposed to as much as 7 times the amount of heat energy as expected by the ASTM fire test. The railroad tanker fire on December 11, 2002, clearly exceeded the temperatures and energy release commonly used for predicting fire resistance capabilities of precast prestressed concrete (Table 1).

Table 1. Heat Energy Distribution and Rate of Heating, BTU / sf / hour

	Upper Bound	<<<<<<	>>>>>>	Lower Bound
% of 30,000 Gallons	100%	90%	80%	70%
Total BTU	1,599,801,036	1,439,820,933	1,279,840,829	1,119,860,725
% of Span 8	70%	60%	50%	40%
Span 8 BTU	1,119,860,725	863,892,560	639,920,415	447,944,290
BTU / sf / hour	61,768	47,650	35,296	24,707
% of ASTM E119	772%	596%	441%	309%

Section 3 Visual Inspection and Mapping

POST FIRE EXAMINATION

PCI – "Design for Fire Resistance of Precast Prestressed Concrete"[2]
Chapter 9.4 – Post Fire Examination

> *It is sometimes possible to determine the temperatures to which concrete was heated by its color. Concrete which has been heated and then cooled and is not discolored probably was not heated above about 600°F. If the concrete has become pink, it may have been heated to a temperature between 600°F and 1100°F. Concrete heated above 1100°F and then cooled tends to become a whitish-gray, and above 1700°F some concretes turn to a buff color.*

CONDITION STATE MAP

Visual inspections of the damage in Span 8 made note of concrete color variations on the soffit of the bottom flanges that corresponded to changes in concrete condition states. Figure 3 contains a map that was produced to display the boundaries of four fire induced color regions. The color regions were described as Extreme-White, Ash-White, White-Gray, and Soot.

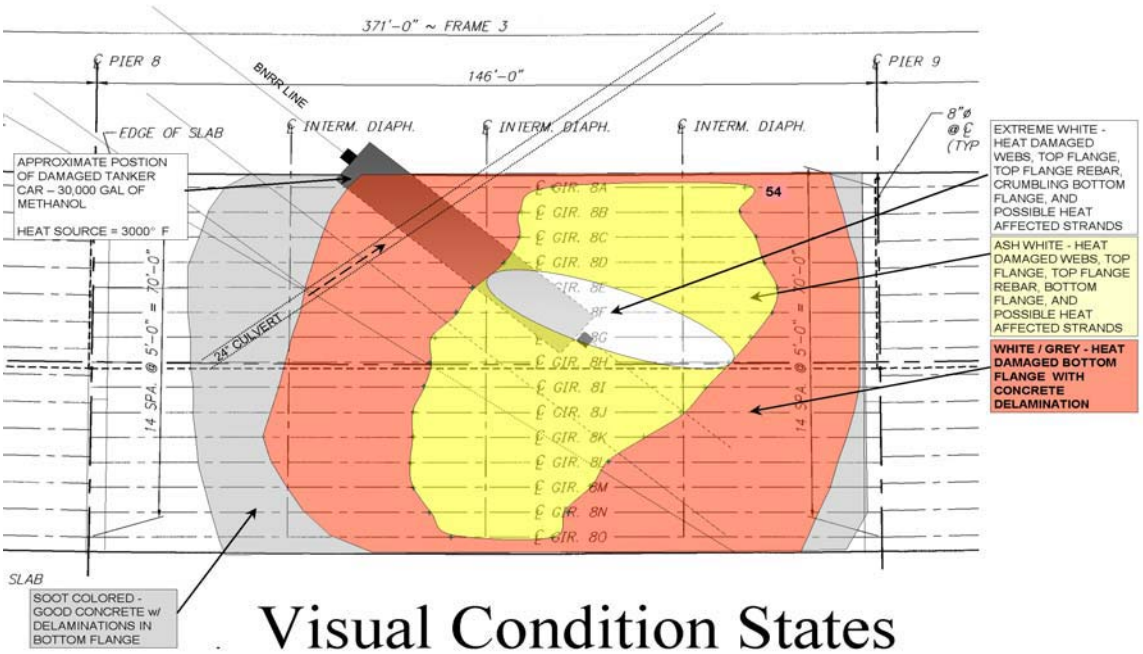

Figure 3. Bottom Flange Visual Condition States

EXTREME-WHITE

The Extreme White bottom flange color appeared to represent exposure to the most intense heat directly over the fire source. The boundaries of this region were difficult to see but the region was clearly visible in photos of span 8. This region represented approximately 10% of the Span 8 area and included Girders 8D, 8E, 8F, 8G, and 8H. An elliptical shape directly above the tanker was placed to approximate the size and position of this region. Concrete on the soffit of the bottom flanges crumbled when tapped with a rock hammer. Prestressing strands on the east and west edges of the bottom flange were easily exposed. Concrete spalls were noted on the soffit and both sides of the webs and both sides of the top flanges. Heat deformation was also noted in mild steel in the top flange. The nylon reinforcing chairs in the bottom flanges burned during the fire leaving deep pockets of charred nylon in the flange soffit.

ASH-WHITE

The Ash-White bottom flange region encompassed approximately 30% of the Span 8 area and included all fifteen (15) girders. The North and South boundaries were relatively easy to see from the ground. Their position was measured from the center of Pier 9. Concrete on the soffit of the bottom flanges crumbled or spalled when tapped with a rock hammer. Prestressing strands on the edges of the bottom flange were easily exposed. Concrete spalls were noted in the webs and the top flanges. Web spalls occurred only on the side facing the heat source, due to shadowing effects from the adjacent girders. The density and extents of spalling on the webs appeared to increase with distance from the heat source. This is probably another demonstration of shadowing effects that occurred near the heat source. The girder webs furthest away from the fire were actually more exposed to the radiant heat than were the webs nearest to the fire. Web spalling and top flange spalling did not occur outside of this color region. The nylon reinforcing chairs in the girders had melted with some indication of being burned during the fire. Melted nylon formed stalactites and pockets of charred nylon were visible.

WHITE-GRAY

The White/Gray bottom flange region encompasses approximately 30% of the Span 8 area and included all fifteen (15) girders. This region was characterizes by obvious delamination sounds in the bottom flanges when struck with a rock hammer. Concrete spalling could be produced with forceful strikes using a rock hammer. The concrete did not crumble and the spalled pieces were 6 inches to 12 inches in size. Prestressing strands on the edges of the bottom flange were difficult to expose using a rock hammer. The web and top flanges were covered with soot but appeared to have sound concrete. The nylon reinforcing chairs in the girders had melted during the fire leaving long nylon stalactites.

SOOT

The Soot colored region encompasses approximately 20% of the Span 8 area beginning at about 6 feet from Pier 8 and extending to Pier 9. The region outside of the White/Gray boundary was dark gray in color. The concrete appeared sound but delamination sounds were evident on the edges of the bottom flange when struck with a rock hammer. The nylon reinforcing chairs in the girders melted during the fire leaving marks on the bottom side of the bottom flange, stalactites were not seen in this area.

Section 4 Concrete Hardness Mapping

SCHMIDT HAMMER – HARDNESS TESTING

PCI – "Design for Fire Resistance of Precast Prestressed Concrete"[2]
Chapter 9.4 – Post Fire Examination

> *To evaluate fire-damaged concrete structures is advisable to determine the extent of severe damage. The limits of the area of concrete damage can often be ascertained through the use of an impact rebound hammer. An average hammer reading should first be obtained in the obviously un-damaged areas for each type of unit. Readings in the damaged areas will generally be substantially lower than those in undamaged areas. By taking a large number of readings throughout the areas suspected of damage, the severely damaged areas can be isolated.*

Hardness testing was performed on the bottom flanges and webs of the girders using a Schmidt Hammer. These tests were conducted at eighty-nine (89) locations on the soffit of the bottom flanges and eighty-nine (89) locations on the webs facing the heat source. The purpose of the tests was to map relative changes in concrete hardness along the length of each girder.

VISUAL CONDITION STATES & BOTTOM FLANGE HARDNESS

Two locations in Span 9 were tested to provide an expected hardness value for concrete not affected by the fire. The average rebound hammer reading for the soffit of the bottom flange in Girder 9N was 61.4. The rebound hammer readings for the soffit of the bottom flanges in Span 8 ranged from a low of 42.0 to a high of 60.9. The minimum hardness reading was found to be directly over the heat source and in general, flange hardness increase with distance

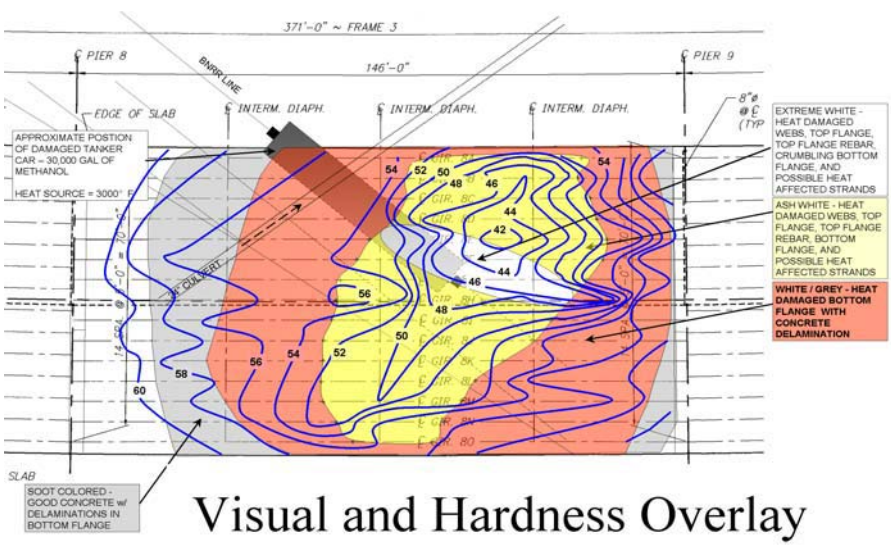

Figure 4. Visual Condition States and Flange Hardness Contours

away from the heat source. A contour map overlay was added to the flange color variations to check for correlations. As can be seen in Figure 4, the hardness measurements were consistent with the visual damage assessments.

FLANGE AND WEB HARDNESS MAP

The average rebound hammer readings for Girder 9N was 54.4. The rebound hammer reading in the webs of Span 8 ranged from a low of 47.9 to a high of 57.4. The web harness reading proved impossible to represent with a contour map because values did not follow a pattern of regular change. Color bands were developed as a method to display the hardness changes on a map. Figure 5 overlays the Web Hardness Color Bands and the Flange Hardness Contours to show that the location of the lowest web hardness values corresponds with the lowest flange hardness values. In general, web hardness increases with distance from the source of the fire but shadowing affected the distribution of web damage. Webs lying outside of the small circle in the center of the heat source were damaged by heat if they were not shadowed and if their angle of exposure to the heat source was less than 40 degrees. One could see how the shadowing occurred by standing at the location of the tanker during the fire. Webs directly above and near that location could not be seen because they were blocked by the bottom flanges. Webs of the exterior girders became more visible resulting in a greater exposure to radiant heat. The web damage (reduced hardness) outside of the Extreme White color region actually increased with distance from the fire.

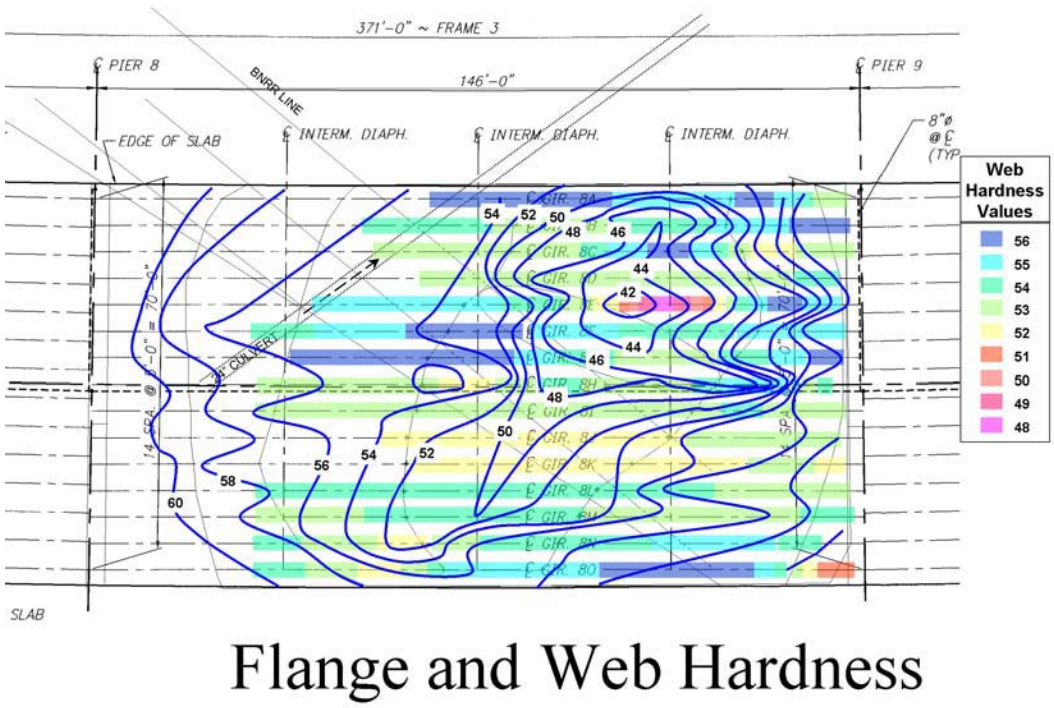

Figure 5. Flange Hardness Contours and Web Hardness Color Bands

Section 5 Prestressing Steel Evaluation

ESTIMATED CONCRETE TEMPERATURES AROUND STRANDS

PCI – "Design for Fire Resistance of Precast Prestressed Concrete"[2]
Chapter 9.4 – Post Fire Examination

> *Prestressing steel that has been heated to temperatures below about 750°F and then cooled retains its room temperature strength. If the steel is heated to 900°F and then is cooled, it retains about 70% of its room temperature strength while prestressing steel heated to 1100°F and then cooled retains about half its original strength.*

Photo 4. Crumbling Concrete Girder 8E

Concrete in the bottom flanges surrounding the straight prestressing strands was easy to remove with the use of a light rock hammer, (photo 4). A small hand held air powered impact hammer was used to remove concrete to exposed prestressing strands in Girder 8F directly above the tanker fire, referred to as location F2. The concrete around strands labeled as number 2, 8, 16, and 18 was removed without difficulty. The color of the exposed concrete varied from ash-white at the surface to light tan (buff color) to a depth of about 0.25 inches, and then a normal gray concrete color on the interior. Beyond a depth of about 1 inch, the concrete became difficult to remove with the rock hammer but remained very easy to remove with the air hammer.

Photo 5. Buff Color Concrete Girder 8E

Possible temperature isotherms shown in Figure 6, were developed by combining visual observation of the concrete color, estimated flame temperatures, ease of concrete removal, and the use of Figure A.4(2) on page 77 of PCI Publication – *Design for Fire Resistance of Precast Prestressed Concrete*.[2] The buff colored 0.25 inch shell indicates possible temperatures of 1700°F. The ease of concrete

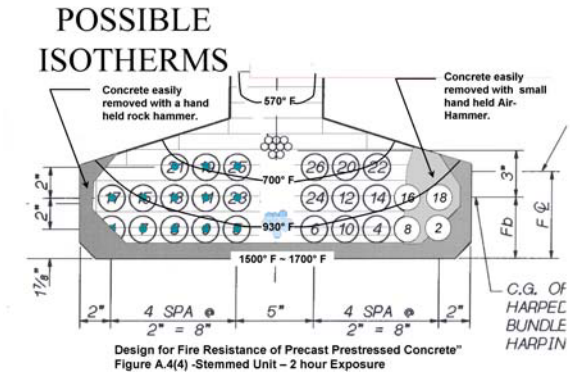

Figure 6. Possible Isotherms in Bottom Flanges

removal indicates that concrete temperatures surrounding the lower row of prestressing strands and the exterior strands of the second row exceeded 900°F (strands 1 thru 10 and strands 17 and 18). Contract plans also revealed that the bottom flange soffit provided only 2 inches of cover for the lower bundle of harped strands. Additional observations of warped mild steel reinforcement in the top flanges supported the concern for a temperature induced relaxation of the prestressed strands.

Field Test of Prestress Force

Prior to removing samples of prestressing strands for material testing, a simple deflection test was performed to calculate the prestressing force remaining in the exposed strands. The deflection tests were conducted on exposed strands with exposed lengths varying from 8 feet to 14 feet. The tests were conducted before the strands were cut and after the cable replacement splices were tensioned. Cable defections were induced by hanging a 4 foot piece of rail provided by the BNSF Railroad. The rail and the attachment cable provided a dead weight of 173.3 pounds.

Photo 6. Deflection Test Dead Weight

The cable deflections were measured multiple times by two inspectors using a dial reading caliper with an accuracy of 0.001 inches. The readings were averaged to provide a deflection for the tension calculation. The exposed span length for the deflection test was measured between the points at which the strands re-entered the concrete.

Photo 7. Deflection Test Measurement

The deflection tests were performed 40 feet above the ground and there was concern about the accuracy of the measurements. The actual location of vertical support points for the exposed strands could extend into the concrete, the displacement measurements could be affected by random placement of the calipers, and the overall accuracy could also be affected by error in the dead weight. Based on these concerns, it was concluded that the span length measurements were accurate to within 2 inches, the dead weight was accurate to within 0.1 pound, and the deflection measurements were accurate to within 0.001 inches. Combining all of these possible measurements errors produces a 3% change in the calculated tension. Additional errors may be present in this method but it is believed that the field test had a

probable accuracy of 5% and was certainly accurate to within 10% of the actual tension force. Figure 7 shows the calculations used in the deflection tests.

Conclusions: The prestressed strand force in girders 8F and 8N appeared to be unaffected by the heat of the fire. Strands within the hot zone at locations F2 and N2, (Figure 8), appeared to have retained 100% of their design force despite high temperatures in the surrounding concrete. We have theorized that the steel strands were able to conduct heat to cooler concrete away from the hot zone and prevent a substantial reduction in the yield stress. Transmission of heat away from the hot zone through the steel strands provides an explanation for the delaminations that have been detected in bottom flanges in the Soot colored region shown in

Span 8, Section F2 Date: 01/23/03
In-Situ Tension - Point Load Test - Original Strand

SPAN = L (inches)	POST WT SPACE (inches)	PRE WT SPACE (inches)	Average Deflection (inches)	TENSION (lbs)
92	1.499667	1.3445	0.155166667	25657
	1.501	1.338		
	1.4985	1.335		
	1.4995	1.3375		
		1.33		
		1.344		
		1.39		
		1.3415		
		1.34		

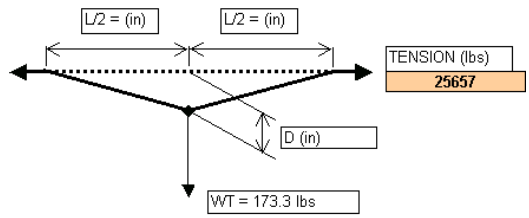

A (si)	E (psi)	WT (lbs)
0.153	29000000	173.3

L (in)	L' (in)	D = Deflection (in)	dT=E*A*(ε) (lbs)	dWT= D*192*E*I/L^3 (lbs)	TENSION = (WT-dWT)/2/D*(.5)*L'-dT
92	92.00052	0.155166667	25.24	0.042180418	25657

Figure 7. Calculation of Strand Tension from Displacement Test

Figure 3, only 6 feet from Pier 8.

MATERIAL AND STRENGTH TESTING OF STRANDS

Three samples of the prestressing strands in Span 8 were removed for lab testing to determine their material properties, Figure 8. Two samples of strand number 2 were removed from Girder 8F. Sample F1 was located near Pier 8 at the boundary of the Soot colored region well away from the hot zone, (Figure 3). The concrete in this region displayed very little damage from the fire. Sample F2 was located directly above the tanker fire in the Extreme-White color region, (Figure 3). Concrete in this region crumbled when tapped with a hand held rock hammer and could be crushed with finger pressure. One sample from Girder 8N, labeled N1, was taken at the eastern edge of the Ash-White color region, (Figure 3). Concrete in this region spalled when struck with a hand held rock hammer resulting in 6 inch long chunks that were difficult to break with hand pressure. The material and strength tests were performed by Smith-Emery Laboratories in Los Angeles, California. The report[6] concluded that the material and strength properties of the strands samples met the requirements for 0.5 inch diameter uncoated seven wire prestress strands as described in ASTM A 416-96 and ASTM A370. Test results are shown in Table 2.

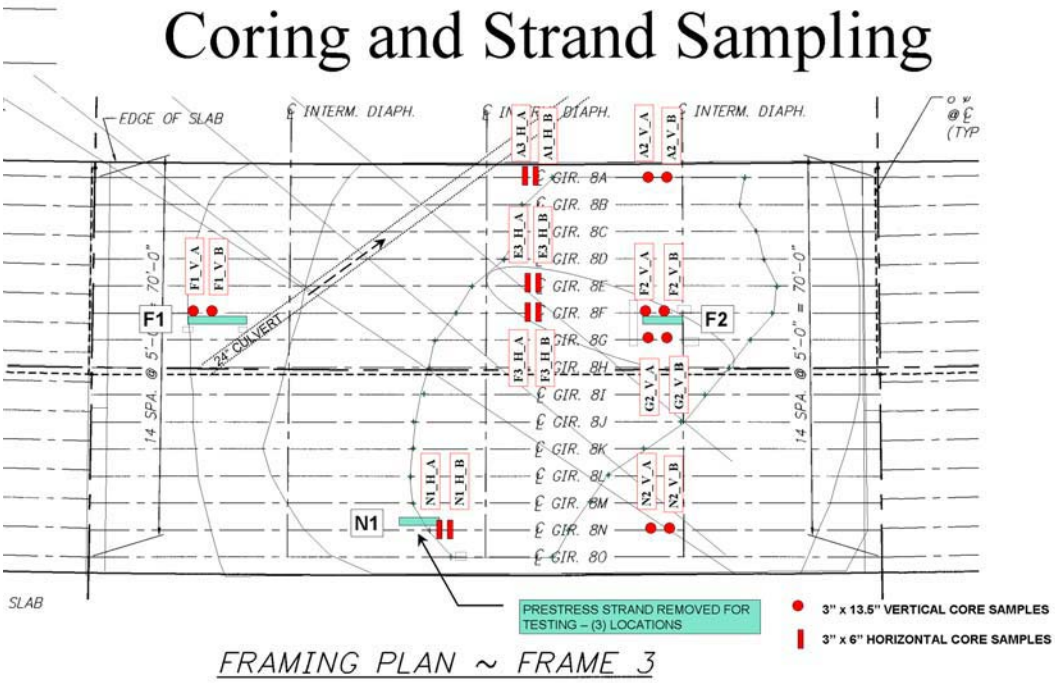

Figure 8. Concrete Core Sample and Prestress Stand Sample Locations

Table 2. Prestress Strand Sample Material Testing Results [6]

ID NUMBER	F1	F2	N1	ASTM A 416-96
Area, inches	0.151	0.151	0.151	0.153
Yield Strength, lbs.	39,000	40,100	40,100	37,170 Min.
Maximum Load, lbs.	43,800	43,700	43,700	41,300 Min.
Modulus of Elasticity	26,190,000	27,200,000	28,140,000	

Conclusions: The prestressing strands retained the original material properties and design prestress force despite being surrounded by concrete that was significantly degraded by the heat of the fire.

Section 6 Core Samples for Girder Evaluations

CORE DRILLING LOCATIONS

Concrete core samples were removed from eighteen locations in the webs and bottom flanges of six girders in Span 8. Vertical cores measuring 3 inches in diameter by approximately 13½ inches deep were removed from ten locations in four girders. Eight of the vertical cores were taken from the hot zone in Girders 8A, 8F, 8G, and 8N. Two vertical cores were taken from in the coolest heat zone of Girder 8E, which was near Pier 8. Eight horizontal cores measuring 3 inches in diameter by 6 inches deep were take in the hot zones near mid-span of Girders 8A, 8E, 8F, and 8N.

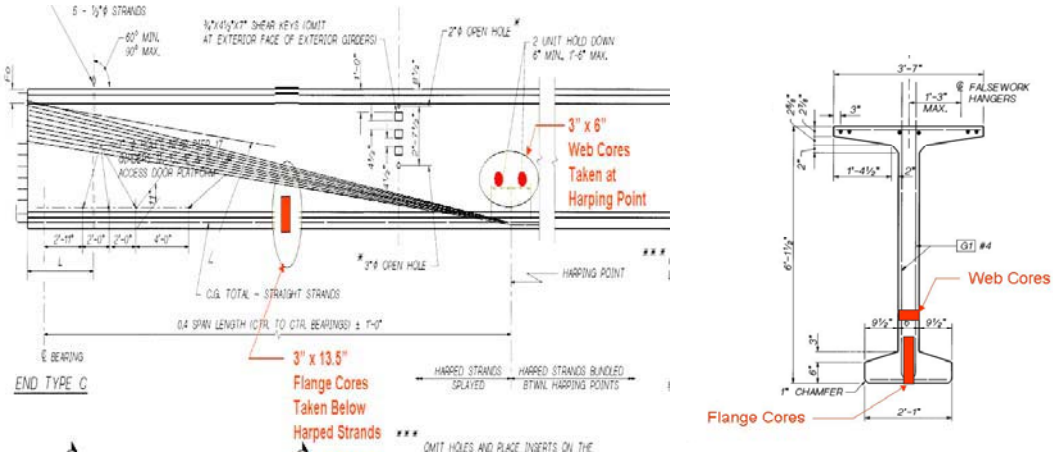

Figure 9. Concrete Coring Located to Avoid Prestressing Strands and Rebar

PETROGRAPHIC EXAMINATION OF HARDENED CONCRETE [7]

Dominion Labs received seven concrete cores for petrographic examination. The V-B series cores (A2, F1, G2 and N2) were drilled vertically into the bottom flange of the bridge girders and the H-B series cores (A3, E3 and N1) were taken horizontally into the web section of the girders. No steel reinforcement or tendon pieces were present in the cores examined.

Sample Preparation and Examination Methods [7]

Cores were prepared for microscopic analysis in general accordance with ASTM C 856, *Standard Practice for Petrographic Examination of Hardened Concrete*. The cores were

sawn lengthwise to obtain slabs for lapping. A stereomicroscope was used to observe ground surfaces for crack frequency/distribution and discoloration of paste and aggregate (10-80X). Examination of the cement matrix was performed on 25-micron-thick sections (0.001-inch) prepared from selected locations near both ends and the middle of each core. The microstructure and mineralogy of the aggregate and cement paste were observed using a polarizing microscope at magnifications up to 400X.

A muffle furnace was used to heat selected whole pieces and sawn longitudinal slabs from V-B and H-B cores to observe general changes in aggregate and cement paste characteristics. Heating tests were informal and performed only for general comparison purposes. Alkalinity was determined by applying Rainbow Indicator™, a phenolphalein-based solution, to freshly broken surfaces and comparing actual color changes to a standard pH color chart.

Common Changes During Heating Phase [7]

Up to 200°F (100°C) – Little or no concrete damage. Paste expands with loss of some free water, but few or no cracks and no color changes.

±500°F (250°C) – Localized cracks. Paste is dehydrating with complete loss of free water causing ½% or more decrease in volume. Iron-bearing aggregates begin to acquire pink/red color.

±700°F (370°C) – Cracks appear around aggregate due to differential thermal properties. Very rapid aggregate expansion of metamorphic and igneous rocks. Numerous microcracks present in cement paste observed in thin-sections. (Most normal weight concrete has lost approximately one half of its compressive strength).

±900°F-1000°F (480°C-550°C) – Concrete may begin to change to a purple-gray color if enough iron and lime present. Portlandite (calcium hydroxide), a major secondary hydration product, is altering to calcium carbonate. Paste has a patchy appearance in thin-sections.

±1000°F (550°C) – Serious cracking of paste and aggregates due to expansion. Purple-gray color may become more pronounced.

±1500°F (800°C) – Cement paste is completely dehydrated with severe shrinkage cracking and honeycombing. Concrete may begin to be friable and porous.

±2200°F (1200°C) – Some components of concrete begin to melt.

By 2550°F (1400°C) – Concrete is completely melted.

Summary of Petrographic Findings [7]

Core No. A2-V-B: Outer 2 inches poor condition (±700°F-900°F); remainder appears sound.

Core No. F1-V-B: Outer 1 inch fair condition (up to ±200°F); remainder appears sound.

Core No. G2-V-B: Outer 3½ inches fair condition (up to ±500°F); remainder appears sound.

Core No. N2-V-B: Outer 2 inches poor condition (up to ±700°F); 6-9 inches fair condition (up to ±500°F); remainder of concrete appears sound.

Core No. A3-H-B: West 2 inches fair condition (up to ±500°F); remainder appears sound.

Core No. E3-H-B: East ½ inch fair condition (up to ±500°F); remainder appears sound.

Core No. N1-H-B: West ½ inch fair condition (up to ±300°F); remainder appears sound.

Petrographer's Conclusion:

The most fire-damage observed in the cores examined appears to be present in the sample vertically extracted from Girder N2. Girder A2 also contains some severely damaged concrete in the outermost 2 inches. Girders G2 and A3 appear to have experienced some damage up to 3½ inches deep. Other girder concrete shows little or no damage.

Extent and severity of fire-damage to the cores examined was based on changes observed in aggregate and cement paste color, mineralogy and microstructure. Comparisons were made to results obtained in research experiments, documented observations of structure fires, and informal heating of selected bridge samples.

WSDOT Comments on Strength and Petrographic Examinations

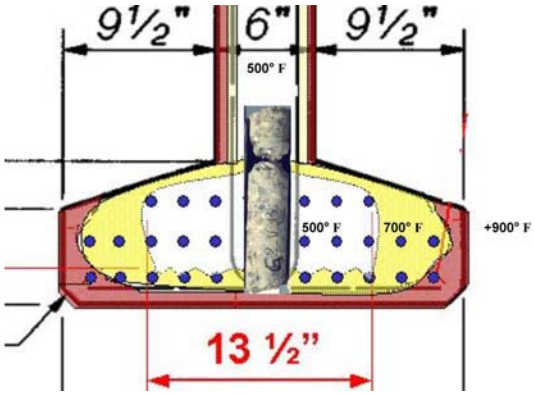

Figure 11. Core Sample G2-V-B – Taken from Extreme-White Color Region

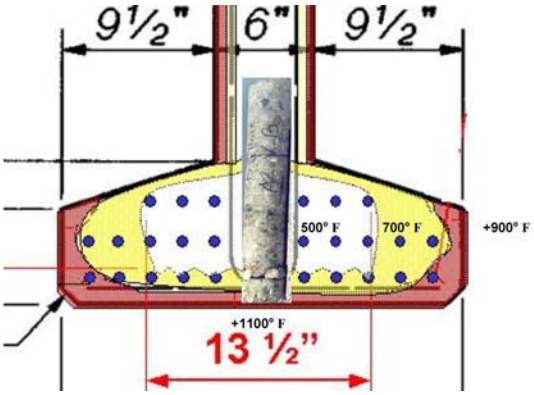

Figure 12. Core Sample A2-V-B – Taken from Ash-White Color Region

Compression tests[8] performed on the core samples indicated that much of the girder core has excellent strength with compressive strengths that exceed 9000 psi. Figure 13 shows the strength test profile and petrographic analysis profile for location A2. However, concrete core samples taken from Girders 8A, 8F, and 8G showed numerous physical signs of concrete degradation. For example, the drilling operation was easier to perform than in regions away from the hot zone. The cores were missing 0.75 inches of concrete from the flange soffit, (Figures 11 and 13). They fractured during the drilling process at the bottom row of strands and at the interface of the web and the flange, (Figures 11 and 12). The cores broke at additional locations if not handled with care. Core samples taken at location F1, in the Soot colored region away from the hot zone, were exceptionally difficult to drill and were very

durable when handled. Theses differences indicated significant heat damage, but the compression tests did not indicate much change or a performance problem.

The petrographic analysis supported the conclusion that extensive damage occurred in all 15 girders. However, the petrographer concluded that the worst case of heat damage occurred in the girder furthest from the heat source. Inspection observations did not support this conclusion. Based on visual analysis, and hardness tests, girders directly over the heat source experienced the most extensive damage to the bottom flange concrete. Core samples from these girders broke during the drilling process and concrete that would have provided valuable clues to the petrographer was destroyed. The petrographic analysis was performed on the solid remnants and did not include large portions of damaged concrete that was not strong enough to survive the drilling process. Based on the petrographer's informal heating tests and description of concrete changes during the heating phase, WSDOT was convinced that surface temperatures on the bottom flange soffits exceeded 1500° F during the fire.

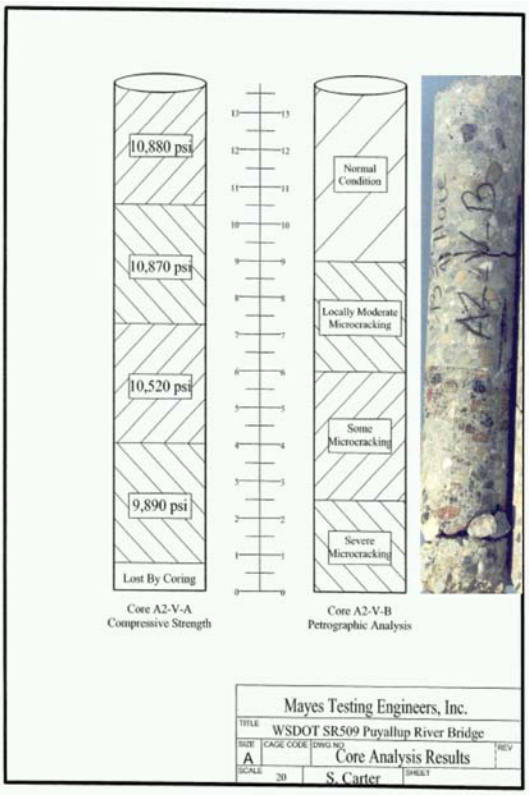

Figure 13. Compression Test Profile Core A2-V-A[8], Petrographic Profile Core A2-V-B[8], Photo Core A2-V-B[7].

Section 7 Pier 8 and Pier 9 Damage

NTIS GCR 99-767 – Response of High Performance Concrete to Fire Conditions
Chapter 2.1 – Overview

> *At the beginning of the fire, the temperature of the exposed side of the concrete slab will rise rapidly. Free moisture, both liquid and vapor, will migrate toward the cold side of the concrete..... As the temperature of the fire-exposed side increases, any free liquid water will boil off and migrate toward the colder side where it will condense..... However, high-strength concrete is not very permeable to water vapor and is even less permeable to liquid water..... Eventually, liquid water may fill the concrete pores at a location ahead of the temperature front, creating a condition known as moisture clog, where the liquid water blocks the transfer of water vapor toward the cold side of the slab. Under such conditions, the pore pressure will result in forced convective mass transfer of superheated steam and air to the heated side of the slab.*

Column 8B was approximately 88 feet from the source of the fire a the railroad tanker, (Figure 14), and showed no significant effects on the side facing the tanker. However, the east face was exposed to methanol flames emanating from the adjacent drainage ditch. Concrete spalling occurred in the bottom 8.5 feet of the column, Photo 8. The concrete spalls were found to be less than 1 inch in depth. No reinforcement was exposed and no concrete delaminations were discovered. The remaining concrete was not discolored and appeared to have serviceable strength.

Columns 9A and 9B were approximately 60 feet from the source of the fire, (Figure 14). Concrete spalling occurred for the full height of the columns on the south face of Column 9A and the southwest face of Column 9B. The spalled concrete thickness frequently exceeded 1½ inches resulting in areas of exposed spiral reinforcement. The remaining concrete was not discolored and appeared hard but delaminated. Exposed aggregate appeared to be in good condition except for one specific type of red rock. This rock was found in many locations to be highly fractured and could be crumbled between a persons fingers. The rock was similar in appearance to red brick and contained a white colored mineral or granule. Efforts were made to remove all of the delaminated concrete from the columns with the use of air hammers but the removal process was stopped at the outer edge of the vertical reinforcement at a depth of approximately 2¼ inches. Many areas of the remaining concrete in both columns sounded hollow indicating that delamination fractures continued inside the column reinforcement cage. A core sample taken from Column 9A at 37 feet above the base of the column (12.92 feet below the top of the column) showed concrete delamination had occurred at a depth of 5¼ inches from the original surface of the column.

COLUMN EXPOSURE & CONDITION STATE MAP

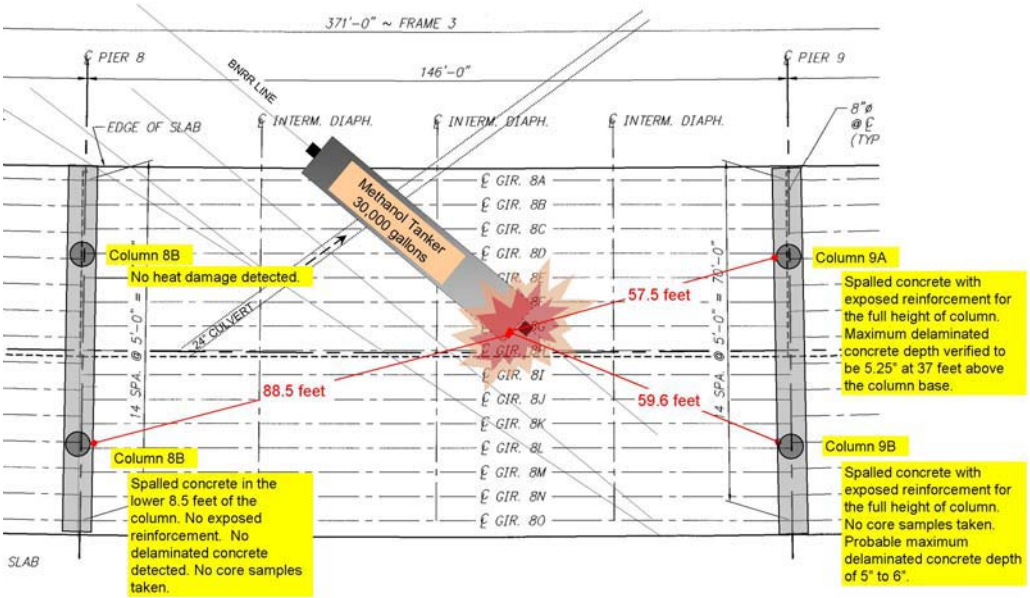

Figure 14. Pier 8 and Pier 9 Heat Exposure and Damage

COLUMN 9A

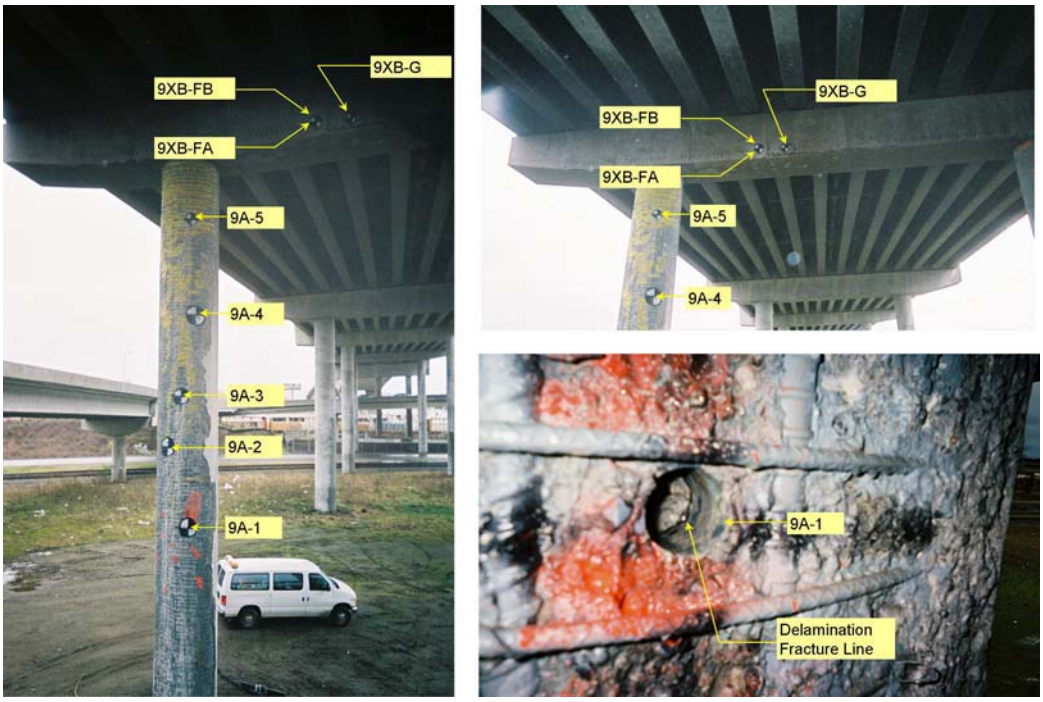

Photo 9. Pier 9 Core Sample Location

CORE SAMPLES

Five (5) 2" diameter by 7" long core samples were removed from the south face of Column 9A and labeled at Cores 9A-1 to 9A-5. Three (3) 2" diameter core samples were removed from the south face of the crossbeam at Pier 9. The cross beam coring effort encountered steel reinforcement at two locations below Girder F, referred to as Cores 9xb-FA and 9xb-FB 9. Core sample lengths were limited to 2" and 1.5" respectively. The crossbeam core sample retrieved below Girder G, Core 9xb-G, avoided the reinforcement and produced a core length of 7".

Core samples from Column 9A confirmed the existence of delamination fractures in the interior core of the column. The maximum depth of a delamination fracture was found to be 5" from the original surface and more than 1inch inside of the vertical column reinforcement, Photo 12. Aside from the delamination fractures, the concrete remaining on Column 9A appeared to have very good strength.

Core sample from Crossbeam 9 did not show any abnormalities and indicate that the crossbeam sustained only superficial damage from the fire.

COLUMN REPAIR STRATEGY

The recommended repair strategy for the damaged area of Column 8B is to perform a simple concrete pour-back with dry concrete mix to provide environmental protection for the column reinforcement. The concrete repair must be performed according to WSDOT repair proceedure, ie;

- **Concrete Removal:** Remove damaged concrete with hand held air hammers. Saw cut perimeter of damaged areas with a ¾" deep / vertical cut. Chip out all loose and soft concrete material within the saw cut area. Provide a minimum of ¾" clearance around all reinforcing steel bars that are exposed 50% or more after removal of the loose and soft material. Thoroughly clean contact surface area.
- **Formed Vertical Repair**
  Surface Treatment: Prior to placement of patch material, thoroughly wet the contact surfaces with potable water.
  Patch Material: Non-shrink grout that can be pumped; such as Masterflow 928 Grout manufactured by Master Builders, or a concrete mix similar to the approved mix used in the structure.
  Patch Placement:
  - **Pumped Grout:** If pumped grout is used, construct a pumping port at the low spot of the repair area. Construct one or more stand pipes located at the high points of the repair area (to provide a head for the concrete).
  - **Concrete Mix:** If a concrete mix is used, construct stand pipes at high points of the repair area accessible to place the repair concrete. Repair area must be accessible to a vibrator. If vibrator can not be used through the stand pipe, form windows must be utilized for vibrator access. Air relief holes may be required at high points of the repair area.

The recommended repair strategy for Column 9A and Column 9B is to perform a seismic column retrofit using a steel confinement shell and grout to fill the annular space between the steel shell and the column. The delaminated concrete in Column 9A and 9B present a concern for the performance of the columns during a seismic event. Providing a steel shell will assure confinement of the column core and assist with the placement of grout or concrete to protect the exposed reinforcement.

CROSSBEAM REPAIR STRATEGY

Structural repairs of the crossbeams at Pier 8 and Pier 9 are not recommended. There is no evidence that the crossbeams experience any degradation of capacity. However, cosmetic treatments such as a light sand blast and application of a pigmented sealer would remove and cover the soot and charred nylon on the south face of Pier 9.

Section 8 Repair or Replace

Repair Option

A successful repair or replacement of the damaged girders in Span 8 must meet the following performance criteria.

- Restoration of the pre-fire ultimate strength capacity.
- Restoration of pre-fire service life, the bridge was newly constructed in 1997.
- Restoration of pre-fire inspection and maintenance schedule typical for prestress girder bridges.
- Maintain visual inspection access to structural components for the detection of corrosion in prestress strands and mild steel reinforcement and detection of loss of concrete compressive strength in the girders and deck slab.
- Maintain easy access for bridge maintenance typical for prestress girder bridges.
- Minimize traffic delays and traffic congestion while repairs or replacement construction is being performed.
- Perform construction activities without being encumbered by frequent and continuous use of the railroad tracks below Span 8.

The service load moment capacity of prestress bridge girders is controlled by maximum allowed tension in the bottom flange. At WSDOT, prestress girders are required to remain fully compressed under the maximum service load condition. That is to say, zero tension is allowed in the bottom flange concrete. Any tension that occurs is assumed to cause the formation of concrete cracks that lead to corrosion of the prestressing strands. Girder concrete provides important protection for the steel strands and its integrity must be preserved to achieve a normal service life of the bridge. Repair strategies for the damaged bottom flanges must address the issue of tension in pour back concrete and how corrosion resistance will be established. Replacement concrete will not have the advantage of being in a pre-compressed state unless additional prestress is added or the bridge is preloaded during the repair process.

The service life of prestress girder bridges is well documented and this type of bridge is one of the most durable and long lasting types of bridges constructed in Washington. Many prestress girder bridges are approaching 50 years of service life. They display almost no deterioration in the girders and have required very little maintenance to preserve their service requirements. The Puyallup River Bridge discussed in this paper was newly constructed in 1997. An inspection of the bridge in November, 2002, just prior to the fire, found the girders in Span 8 to be in excellent condition. A small rock pocket on the bottom flange of Girder 8N and construction related rust staining on the east face of Girder 8I were the only defect.

Repair ideas fell into one of the three strategies listed below.

1. Encasement.
2. Hydro-blast / Preload / Pour-Back.

3. Hydro-blast /Prestress / Pour-Back.

ENCASEMENT: The objective of the encasement alternatives is to provide some type of permanent confinement around the damaged girders to prevent further deterioration. The fire effectively destroyed the concrete protection for the prestressing strands. If the service life could be restored, the post fire strength of the bridge might be acceptable. Encasement alternatives included: shot-crete and wire mesh, stay in place steel forms with pressurized epoxy grout, stay in place forms with a combination of concrete and pressurized epoxy grout, and removable forms with concrete and pressurized epoxy grout. One major draw back of the encasement alternatives is the added weight of the encasement shell and a corresponding reduction in live load capacity of the girders. Another drawback is the difficulty a protective shell creates for future bridge inspections. All encasement alternatives would hide the damaged concrete and prevent visual inspections from detecting corrosion of the prestressing strands and continued deterioration of the damaged concrete. An encasement repair strategy would require future bridge inspection to be made with some type of specialized non destructive testing technology.

HYDRO-BLAST / PRELOAD / POUR-BACK: The objectives of this alternative is to safely remove and replace all damaged concrete, (Figure 15). Pre-compression would be added to the bottom flange by adding a vertical preload to the bridge deck prior to placing the concrete. Epoxy grout would be injected into the cold joint between the new concrete and remaining girder concrete. The pre-load would be removed to compress the pour back concrete.

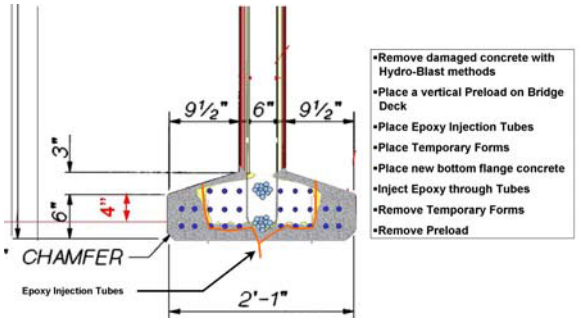

Figure 15. Hydro-Blast / Preload / Pour-Back

HYDRO-BLAST / PRESTRESS / POUR-BACK: The objectives of this would be similar to the previous alternative but prestress would be used instead of a pre-load, (Figure 16). Compression in the new bottom flange concrete would be established by installing bonded prestress strands. The damaged concrete would be removed with hydro-blast methods The prestress strands would be installed above and below the existing bottom flange. A strand anchorage point would be established on the far side of Pier 8 and a jacking point would be established on the far side of Pier 9. Epoxy grout tubes and mild steel stirrups would be attached to the remnants of the bottom flange prior to the placement of new concrete. The pour back concrete would be placed, epoxy would be injected into the cold

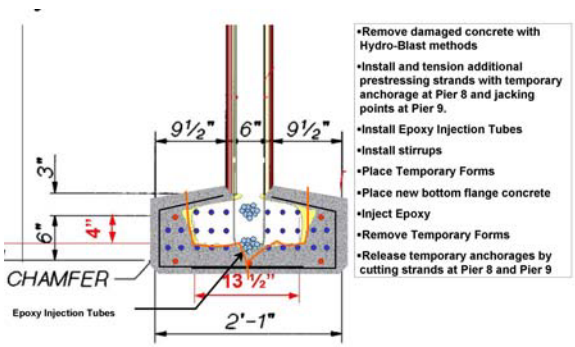

Figure 16. Hydro-Blast / Prestress / Pour-Back

joint region, and the supplemental prestressing strands would be cut at Pier 8 and Pier 9. Release of the strand anchorages would transfer tension into the girder and establish compression in the pour back concrete.

Replacement Option

Objectives of the replacement strategies are to restore the service life and ultimate moment capacity by replacing all 15 girders in Span 8, (Figure 17). The demolition and construction sequences must minimize disruption to highway and railway operations. Three alternative design concepts were considered. Alternative 1, replace "In-Kind" with 15 lines of W74G girders using the As-Built specification for concrete strength and strand diameter. Alternative 2, replace with 10 lines of W74G girders using 9000 psi concrete and 0.6 inch diameter prestressing strands. Alternative 3, (Figure 18), replace with 8 lines of WF74G girders using 9000 psi and 0.6 inch diameter prestressing strands. The WF74G girder section is a new long span section with greater capacity than the W74G girders.

The construction sequence for all three alternatives would be similar. Traffic would be reduced to two lanes and diverted to one side of the span. The unloaded side would be separated with a longitudinal cut along the center of the bridge deck and with transverse cuts at the face of the end diaphragms. Additional cuts in the deck would be made to allow the girders to be removed and lowered to the ground for demolition. Temporary bearing seats would be added to the crossbeams at Pier 8 and Pier 9 to support the new girders. New end diaphragms would be doweled into and cast against the existing end diaphragms to provide permanent support for the new girders. Longitudinal reinforcement in the deck would be extended into Span 7 and Span 9 to re-establish live load continuity. The sequence would be repeated for the other side and a longitudinal closure pour in the deck would join the two units.

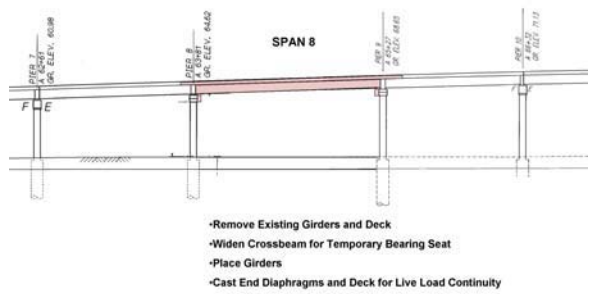

Figure 17. Span 8 Replacement Profile

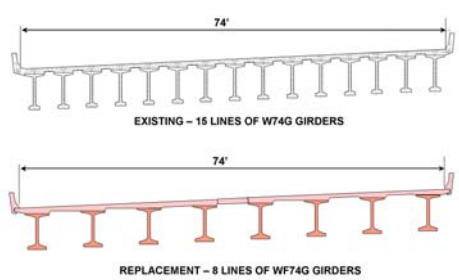

Figure 18. Span 8 Replacement Section

Cost Comparison

Cost estimates were developed to compare the Hydro-blast/Preload/Pour Back strategy with a replacement strategy using 8-Lines of WF74G girders. The cost study shows that a replacement using high performance concrete and the new WSDOT prestress girder section is equal to the cost of repair. Tables 3 and 4 list the comparative costs.

The replacement option also resolves risks that are associated with the repair options. Repair activity could cause additional structural damage to the girders. Repair work would be made directly over the railroad resulting in frequent disruptions to railway operations and repair activities. The replacement also provides a clear forecast of long term performance and liability. Concrete girder repairs are typically more problematic than new high quality precast girders. The conclusion of the WSDOT Bridge Office is that a replacement strategy provides a lower long term cost and a much lower long term risk.

Table 3. Cost of Repair

ITEM	UNIT	QUANTITY	UNIT COST	COST
HYDRO-BLAST / POUR BACK REPAIR OPTION				
MOBILIZATION	L.S.	1	L.S.	78,900.00
GIRDER REPAIR	S.F.	12580	50.00	629,000.00
EPOXY CRACK SEALING	EST.	1	EST.	50,000.00
FORCE ACCOUNT COLUMN JACKETING	L.S.	1	L.S.	110,000.00
PIGMENTED SEALER	S.F.	20000	2.5	50,000.00
			TOTAL =	867,900.00
			SAY	870,000.00

Table 4. Cost of Replacement

ITEM	UNIT	QUANTITY	UNIT COST	COST
8 - LINES OF WF74G REPLACEMENT OPTION				
MOBILIZATION	L.S.	1	L.S.	78,993.00
REMOVING SPAN 8	S.F.	10640	15.00	160,000.00
EPOXY COATED ST. REINF. BAR	LBS.	30000	1.00	30,000.00
ST. REINF. BAR	LBS.	42600	0.75	31,950.00
CONC. CLASS 4000D	C.Y.	325	600.00	195,000.00
CONC. CLASS 4000	C.Y.	136	500.00	68,000.00
P.C. GIRDERS (W74G)	L.F.	1400	120	68,000.00
TRAFFIC BARRIER	L.F.	284	75	21,300.00
CONDUIT PIPE 2 INCH DIAM.	L.F.	568	10	5,680.00
COLUMN JACKETING	L.S.	1	L.S.	110,000.00
			TOTAL =	868,923.00
			SAY	870,000.00

Section 9 Summary

In summary the railroad tanker fire subjected all fifteen girders in Span 8 to intense heat in a short period time. Flame temperatures approached 3000° F and surface temperatures on the soffit of the prestressed girders may have reached 1700° F. Internal temperatures in the bottom flange and webs ranged from 1100° F to 500° F. The concrete heating rate was rapid and the cooling rate was accelerated by water spray from fire trucks. Both of these factors contributed to concrete damage in the girders and the adjacent columns. The prestressing steel survived the fire without noticeable loss of prestress despite being embedded in concrete that was heated to 900° F. The conductive property of steel

apparently transferred heat to cooler regions of the girders and prevented yielding of the steel in the hottest regions. Petrographic analysis confirmed extensive heat penetration and micro cracking in Girder 8N that was furthest from the source of the fire. Girders directly over the fire displayed more extensive damage with the loss of concrete integrity around the prestress strands in the bottom flange. Concrete in the hot zone crumbles and spalls with light blows from a hand held rock hammer and most of the bottom flange concrete can easily be removed with the use of hand held air powered impact hammers.

Replacement of Span 8 with eight lines of WF74G girders is favored over all suggested repair strategies. A replacement can be made for approximately the same cost as a repair. and it restores the bridge to its pre-fire strength and service life.

Columns will be repaired with steel jackets and grout injection typically used for seismic retrofit designs. The overall seismic response will be analyzed to consider the change in column stiffness and mass of the superstructure.

CONCLUSIONS

Risk of fire damage for bridges over railroad yards and switching complexes should be considered in the design of highway bridges. Track switches, changes in track alignment, and soft rail beds are common area for derailments and coupler jumping.

Experimental data and literature to aid in analyzing the effects of tanker fires under bridges is limited. Most all experimental data, research, and design documents pertain to building fires and their affects on concrete within the buildings. Tanker fires caused by highway fuel truck or railway tanker cars are explosive in nature and greatly exceed the temperatures and rate of heating prescribed in the ASTM fire resistance test. Additionally, the heat transfer mechanism in taker fires is dominated by radiant energy as opposed to hot air and heat convection. Additional research addressing highway structures and fuel tanker fires would be beneficial.

Rapid identification of concrete damage zones can be made by observing the variation in concrete color immediately following a fire. The visual color mapping performed for this bridge fire correlated very well with variations in concrete hardness. Inspectors easily established the general shape and boundaries of four damage levels. The rebound hammers test validated the visual observations and provided an objective description of damage areas.

References

1. Pharmco Products, Inc., "Methanol", *Material Safety Data Sheets*, Revision 1.0, October, 1997
2. Armand H. Gustaferro (ahg) and Leslie D. Martin (ldm), "Design for Fire Resistance of Precast Prestressed Concrete", *Prestressed Concrete Institute*, MNL-124-89, Second Edition, 1989
3. Robert T. Ratay (rtr), "Forensic Structural Engineering Handbook", *McGraw-Hill*, Copyright 2000
4. Allan T. Kirkpatrick (atk), "Adiabatic Flame Temperature", *Colorado State University Web Site*, http://www.engr.colostate.edu/~allan/thermo/page12/adia_flame/Flamemain.html
5. C. David Cooper (cdc) and F. C. Alley (fca), "Air Pollution Control", Table A.6 and Table B.6, *Waveland Press, Inc*., Second Edition, 1994
6. V. Andrew Tan, " ½ inch Uncoated Seven Wire Prestress Strand Test", Smith-Emery Laboratories, Project 32639-1, February, 2003
7. Dick M. Glasheen (dmg), "Petrographic Examination of Hardened Concrete – WSDOT Bridge 509/11", *Dominion Labs, Inc.*, Project No. S2084, March, 2003
8. Stuart J. Carter (sjc), "Fire Damage Concrete Testing, Puyallup River Bridge", *Mayes Testing Engineers*, Project No. S2084, June, 2003.
9. Douglas F. Burke (dfb), "Marine Concrete Repair", *Naval Facilities Engineering Service Center*, March 12, 1999
10. Daniel R. Flynn (drf), "Response of High Performance Concrete to Fire Conditions: Review of Thermal Property Data and Measurement Techniques", *National Institute of Standards and Technology*, NIST GCR 99-767, March, 1999